AN INTRODUCTION TO ULTRASONIC PIEZOELECTRIC MOTORS

Ilie ROMANIUC
Ştefan cel Mare University of Suceava

REZUMAT. Această lucrare face o introducere asupra motoarelor ultrasonice piezoelectrice, contextul istoric al dezvoltării acestora şi tendinţele actuale de cercetare şi dezvoltare.

Cuvinte cheie: actuator piezoelectric, motor ultrasonic.

ABSTRACT. This paper introduces the piezoelectric ultrasonic motors, the historical context of their development and current trends of research and development.

Keywords: piezoelectric actuator, ultrasonic motor.

1. INTRODUCTION

The electromagnetic motor is used in industry for more than a century, being the most used type of motor. Current development trends require increasingly smaller motors likely to produce high torque per weight unit. The electromagnetic motor is limited in this respect without new findings on magnetic and superconducting materials, so the attention of researchers turned to a new type of motor i.e. the ultrasonic motor.

2. HISTORICAL BACKGROUND

The phenomenon of piezoelectricity was discovered in France more than 120 years ago. The Curie brothers discovered that by compressing a crystalline material such as Rochelle salt they could create electric voltage. The opposite is also true; if you place an electric field over a piezo crystal it changes shape. This shape-changing capacity is the basis for piezoelectric motor technology.

The first motors were developed fairly simultaneously by researchers in the former Soviet Union and in the USA. But it was not until the 1980's that motors appeared in high numbers in commercial products, the most well-known example being motors for camera lenses. Still, most of the piezoelectric motors found on the market are targeted towards the research community.

The fundamental construction of the ultrasonic piezoelectric motor is shown in Figure 1.

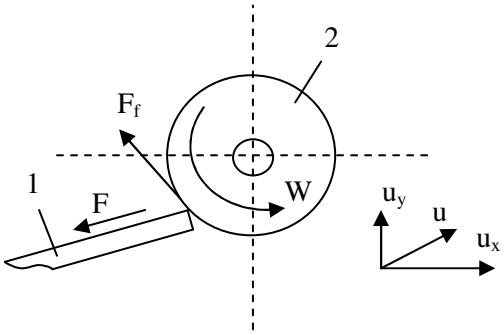

Fig. 1. Fundamental construction of ultrasonic motors [1]. 1 – active element; 2 – activated element.

At this type of ultrasonic motor, the displacement u (u; u_x; u_y.) is achieved by transmitting energy from the stator 1 by means of friction forces F, to the rotor 2.

As a representative model in the history of the ultrasonic motors, we consider the motor proposed by H. V. Barth in 1973, fundamental construction is shown in Figure 2.

This motor is working due to the friction forces between surfaces in contact. Element 3, excited by the piezoelectric plate 4, acts on the rotor 1 which starts to rotate. Depending on the desired direction

of rotation, the rotor can be driven by element 3 from the left or the right side.

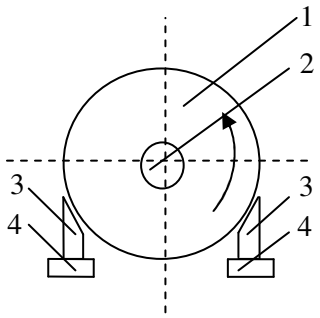

Fig. 2. Fundamental construction of Barth motor. [1].
1 – rotor; 2 – shaft; 3 – active element; 4 – piezoelectric plate.

3. CLASSIFICATION AND FEATURES OF ULTRASONIC MOTORS

The most important categories to classify ultrasonic motors are:

- operation: rotary type and linear type
- device geometry: rod type, π-shaped, ring (square) and cylinder types;

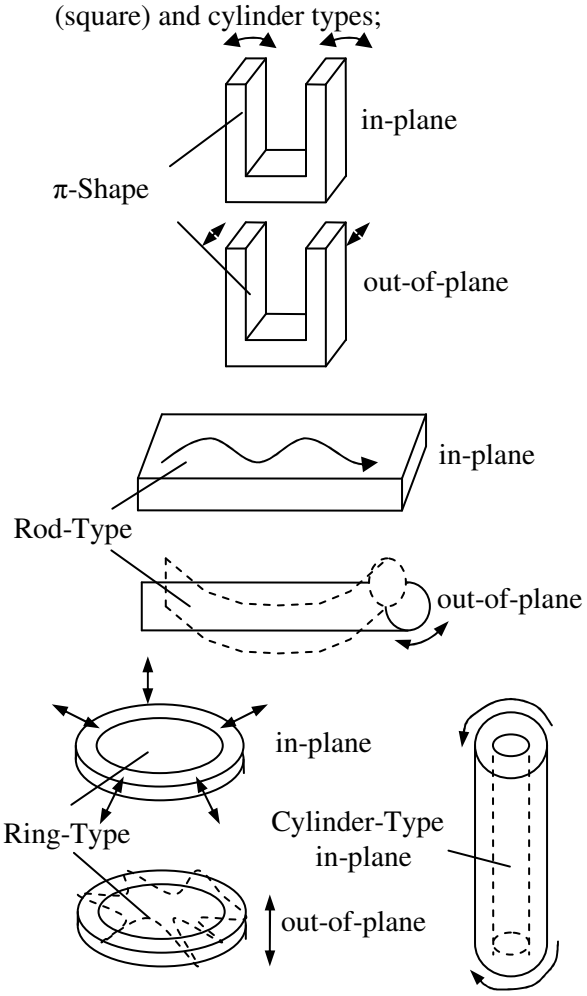

Fig. 3. Vibrator shapes for ultrasonic motors [4].

- generating wave: standing wave type and propagating wave type.

During the 1980's, several researchers including V. V. Lavrinenko, P. E. Vasiliev highlighted a few basic features of the ultrasonic motors among which we can mention several merits including:

- Low speed and high torque;
- High power/weight ratio and high efficiency;
- Negligible effect from external magnetic or radioactive fields, and also no generation of these fields.

but also demerits such as:

- Necessity for a high frequency power supply;
- Drooping torque–speed characteristics.

4. ACTUAL STAGE OF PIEZOELECTRIC ULTRASONIC MOTOR

Latest discoveries in this field led to producing piezolectric motors with increased robustness, a low production cost and greatly reduced size.

In recent years Physik Instruments (PI) has created and developed numerous models of piezoelectric motors.

U-164 PILine Piezo Linear Drive

Fig. 4. U-164 Piezoelectric motor [5].

The core piece of the system is a piezoceramic plate, which is excited with high-frequency oscillations. A friction tip attached to the plate moves along an inclined linear path. Through its contact with the friction bar, the moving part of the mechanics drives forward or backwards. With each oscillatory cycle, the mechanics executes a step of a few nanometers; the macroscopic result is smooth motion with a virtually unlimited travel range.

The U-164 motor can provide accelerations of up to 5 G and speeds of up to 500 mm/s, together with high resolution and high holding force. Because the

ceramic stator is pressed against the slider, holding forces are generated when the motor is powered down. The result is very high position stability without the heat dissipation common in conventional linear motors.

This motor type can be successfully used in areas such as biotechnology, R & D, semiconductor testing, mass storage device testing, metrology, micromanipulation, microscopy, etc.

M-660 PILine Rotation Stage

Fig. 5. M-660 Piezoelectric motor [5].

M-660 precision rotation stages use PILine ultrasonic piezo motors that act on a ceramic friction ring to drive the platform. This direct drive principle allows for the compact design and low profile of the stage. An integrated incremental encoder offers precision position control with up to 4 µrad resolution. The integrated U-164 PILine linear motors provide a maximum torque of 0.3 Nm, independent from the direction of motion, and a maximum velocity of up to 720 °/sec. The maximum load is 2 kg.

Positioning systems equipped with ceramic ultrasonic drives of the PILine series provide several advantages over positioners that apply classic drive technology: smaller dimensions; higher holding force when powered down; no holding current; no leadscrews, gears or other mechanical components, no wear or maintenance.

Another company that produced micro motors based on piezoelectric technology is PiezoMotor AB in Sweden.

The PiezoWave motor made by this company is currently used in the mobile phone industry, various devices in the medical field, at the electromechanical closing doors, etc.

Fig. 6. M-660 Piezoelectric motor [6].

The PiezoWave motor consists of two piezo elements that vibrate with an ultrasonic frequency when activated electrically. This vibration causes the motor drive pads to move elliptically as the piezo elements bend. As a result, the drive pads push on either side of the drive rod to create linear movement.

Small size is an obvious advantage of PiezoWave, but the motors other qualities including robustness, motion dynamics, cost, power efficiency and weight, make it an ideal choice for demanding applications. Its simple design facilitates integration into a wide range of products.

The smallest piezoelectric linear motor in the world, called the SQUIGGLE motor was developed by the New Scale Technologies.

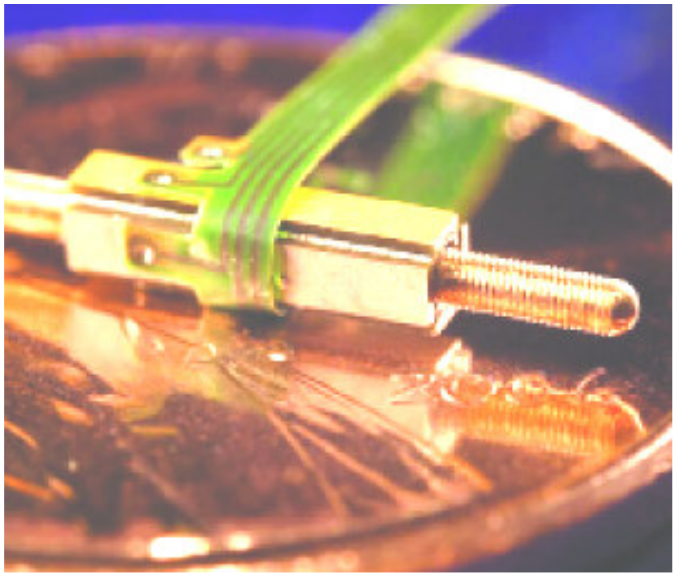

Fig. 7. Squiggle Piezoelectric motor [7].

This patented ultrasonic motor creates high force and speed with only a few parts - compare to complex electromagnetic gearhead motors with hundreds of parts. SQUIGGLE micro motors allow product designers to add motion features into

products where they could not have been imagined before. This simple, robust piezo motor is scalable to much smaller sizes than electromagnetic motors, without significant loss of power efficiency. This makes it ideal for portable products such as micro cameras, medical devices and biometric detection systems.

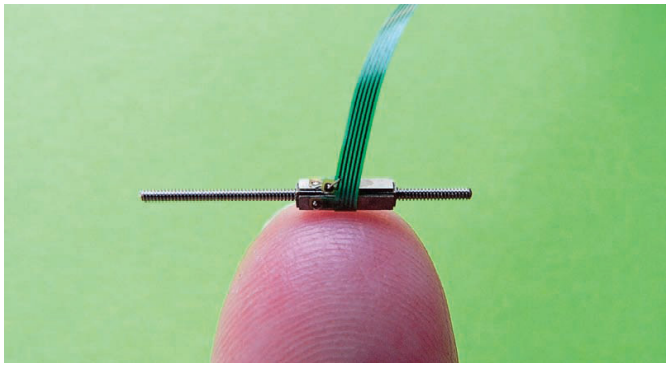

Fig. 8. Squiggle Piezoelectric motor [6].

A SQUIGGLE motor consists of several piezoelectric ceramic actuators attached to a threaded nut, with a mating threaded screw inside. Applying power to the actuators creates ultrasonic vibrations, causing the nut to vibrate in an orbit. The rotating nut turns the threaded screw, creating a smooth in-and-out linear motion. Thread friction drives the shaft, directly converting rotary motion to linear motion.

SQUIGGLE micro motor features:

- nanometer resolution;
- variable speed from 1μm/second to 10 mm/second;
- as small as 1.55 x 1.55 x 6 mm;
- quiet and smooth;
- non-magnetic, vacuum and cryogenic option available.

5. CONCLUSION

Ultrasonic piezoelectric motor technologies are advancing at a rapid rate. High volume consumer applications are transforming the ultrasonic piezoelectric motor from a specialty research item to a standardized electronic component.

Advances such as precision measured in nanometers, response time that is practically instantaneous, excel in speed and speed dynamics, miniaturization, will pave the way for new applications.

REFERENCES

[1] AMZA, Gh. *Ultrasunetele*, Editura Agir, 2006, ISBN 973 – 720 – 096 – 9.

[2] BARTH, H.V. *IBM Tech. Disclosure Buletinl,* 1973, 16 2263

[3] UCHINO, K. *Piezoelectric Actuators and Ultrasonic Motors*, Kluwer Academic Publishers, MA, 1996.

[4] UEHA, S.; TOMIKAWA Y. *Ultrasonic Motors*. Oxford, U.K.: Oxford Science, 1993.

[5] www.physikinstrumente.com

[6] www.piezomotor.se

[7] www.newscaletech.com

[8] www.micromo.com

[9] www.usinenouvelle.com