STUDY OF A 3 PHASE (6/4) SWITCHED RELUCTANCE MOTOR CONTROL

Nicolae-Daniel IRIMIA
Gheorghe Asachi Technical University of Iaşi

Alecsandru SIMION
Gheorghe Asachi Technical University of Iaşi

Leonard LIVADARU
Gheorghe Asachi Technical University of Iaşi

Sorin VLASCEANU
Gheorghe Asachi Technical University of Iaşi

Ovidiu DABIJA
Gheorghe Asachi Technical University of Iaşi

Ana-Maria MIHAI
Gheorghe Asachi Technical University of Iaşi

REZUMAT. Controlul masinilor cu reluctanţa variabila a cunoscut un interes din ce în ce mai crescut în ultima perioada, ca urmare a avantajelor şi a diferitelor posibilitaţi de utilizare pe care le ofera aceste categorii de maşini electrice. În lucrarea de faţa este tratata problema alegerii unor configuraţii optime de comanda ale unui motor cu reluctanţa variabila cu 3 faze (6 poli statorici, 4 poli rotorici), utilizand diverşi algoritmi de control. Structura schemei de comanda şi control cuprinde un regulator de curent, pentru reglarea curentului de faza statoric între anumite limite prescrise, alte tehnici de comanda utilizate fiind: Soft Switching şi respectiv Hard Switching. Reglarea curentului pe fiecare faza s-a realizat prin intermediul unui circuit bloc cu histerezis, permitand o variate a curentului cu maxim 2 A faţa de valoarea prestabilita. Pentru micşorarea timpului de descarcare a energiei acumulate în campul magnetic corespunzator fiecarei infaşurari de faza statorice, din momentul deconectarii acesteia de la sursa de alimentare, s-a utilizat cate o rezistenta de valoare prestabilita, conectata în serie cu fiecare faza (din momentul deconectarii fazei de la reţea).

Cuvinte cheie: comanda, control SRM, IGBT, PWM.

ABSTRACT. Switched reluctance motor control had known an increasing interest lately, due to various advantages and different possibilities of uses that these types of electric machines offers. This paper treats the problem of choosing the optimal control configuration of a switched reluctance motor with 3 phases (6-poles stator, 4-poles rotor), using various control algorithms. The command and control scheme structure includes a current regulator, for mantaining the stator current phase within certain prescribed limits and the other control techniques used are: Soft Switching and Hard Switching. Adjusting of the current on each phase was done through a block circuit with hysteresis control, allowing a variation of current with a maximum of 2 A within the setpoint. To decrease the time of dissipating the accumulated energy in the magnetic field corresponding to each stator winding phase, from the moment of disconnection from the power supply, it has been used an electrical resistor with a predetermined value, connected in series with each phase (begining with the moment of disconnecting the phase from the power supply).

Keywords: command, control SRM, IGBT, PWM.

1. THE THREE-PHASE SWITCHED RELUCTANCE MOTOR TOPOLOGY

The switched reluctance motor is driven by voltage strokes coupled with the given rotor position. In this electric drive, a 3-phase switched reluctance motor with 6 stator poles and 4 rotor poles was used, with the following electro-mechanical parameters (Table 1):

Table 1. **Switched Reluctance Motor Parameters**

Stator Resistance [Ohm]	0.05
Inertia [kg.m.m]	0.05
Friction [N.m.s]	0.02
Initial speed [Ω_0 (rad/s)]	0.0
Initial position [θ_0 (rad)]	0.0
Unaligned inductance [H]	0.67e-3
Aligned inductance (H)	23.6e-3
Saturated aligned inductance [H]	0.15e-3
Maximum current [A]	450
Maximum flux linkage [V.s]	0.486
Voltage Supply [V]	230

Figure 1 shows the characteristics of the magnetic flux corresponding to a stator phase winding, depending on the current through the phase and the rotor position, θ:

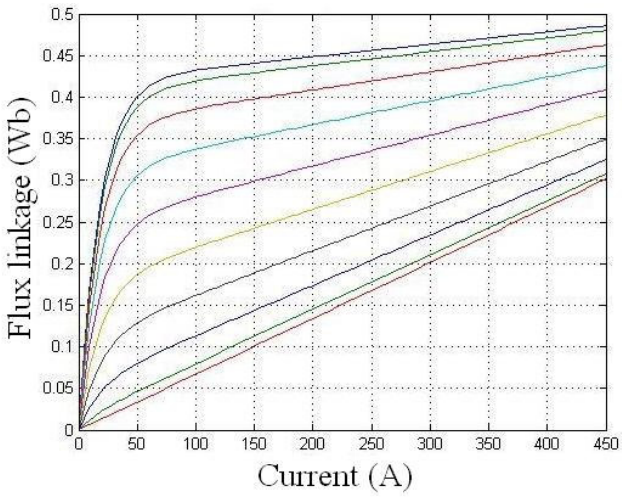

Fig. 1. Magnetization characteristics of the 3-phase (6/4) Switched Reluctance Motor: φ(θ,i) .

The switched reluctance motor electromagnetic circuit is characterized by non-linear magnetization. It can be seen that the influence of the phase current is most apparent in the aligned position, where saturation effects can also be observed. The torque generated by the stator phase is a function of phase current and magnetic flux; therefore, the phase torque is not constant for constant phase current for different rotor positions, which causes SR motor torque ripple.

2. THE POWER CONVERTER USED TO CONTROL THE SWITCHED RELUCTANCE MOTOR

The topology of the power stage has two controllable power semiconductor devices (IGBTs) for each stator phase winding, and respectively two antiparallel discharging diodes, which enables control of the individual phases fully independent of the other and thus permits the widest freedom of control. Another advantage of using two power transistors for each phase is that it also allows the implementation of two main techniques of control: Hard Switching and Soft Switching respectively. A control algorithm for the stator phase current was used (in order to limit the amplitude of the stator phase current to a certain prescribed value). We have the condition of a quickly discharge for the energy accumulated in the magnetic field corresponding to each stator phase winding after it is being disconnected from the main power supply. For achieving this goal, we used an electrical resistor of a given value (R_1 = 100 Ω in the simulations), depending on motor operating conditions, connected in series with each stator phase winding from the moment when that phase is being disconnected from the power supply. The time constant of the circuit is thus much reduced in the moment of disconnecting the stator phase winding (when also the electrical resistance R_1 is being connected in series with that phase), according to the relationship:

$$\tau = \frac{L}{R_1 + R_L} \tag{1}$$

(ideal case), where: τ - time constant of the circuit at the disconnection moment [sec], L - inductance corresponding to the stator phase at the disconnection time [H], R_1 - electrical resistance connected in series with the stator phase winding [Ω], R_L - electrical resistance of the stator phase winding [Ω]. According to (1), as the R_1 phase-series resistor is higher, the more the τ circuit time constant value accordingly decreases.
For short-circuiting the R_1 resistor when the phase is being energized, it has been used an IGBT transistor parallel-connected with R_1, switched on when the stator winding phase is energized through the converter bridge, and respectively, switched off when the stator phase is being disconnected from the power supply.

2.1. Simulink block diagrams of bridge converters used to control each stator phase

The stator phase windings of the switched reluctance motor are being energized through one of the bridge power converters illustrated in Fig. 2, 3, 4 and 5. Connection points between the power bridge converter and the stator phase winding are denoted by C_1 and C_2 respectively.

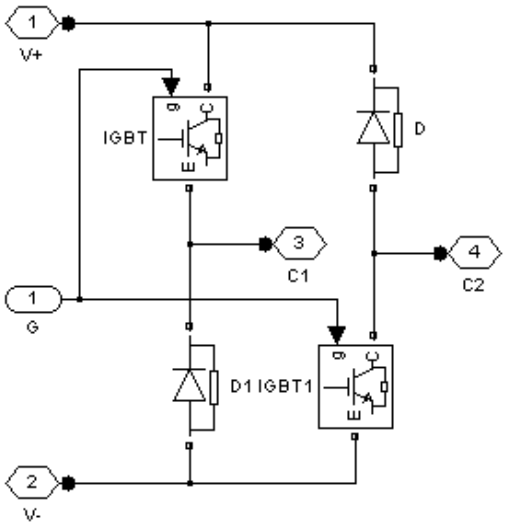

Fig. 2. Simulink block diagram of the bridge converter without the R_1 resistor, in case of using the Hard Switching technique.

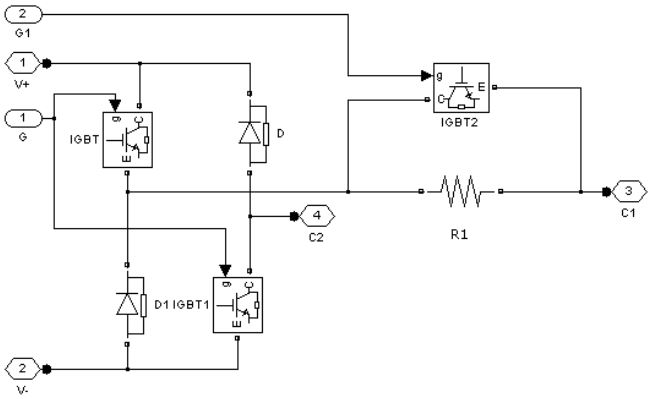

Fig. 3. Simulink block diagram of the bridge converter with the R_1 resistor, in case of using the Hard Switching technique.

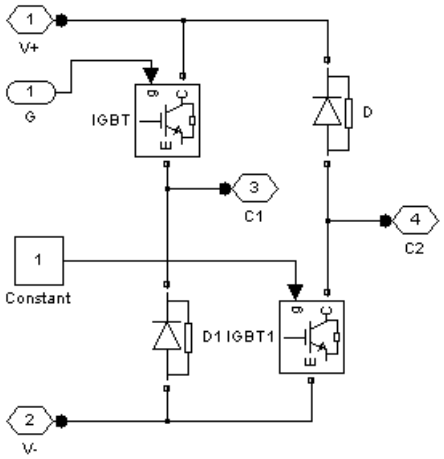

Fig. 4. Simulink block diagram of the bridge converter without the R_1 resistor, in case of using the Soft Switching technique.

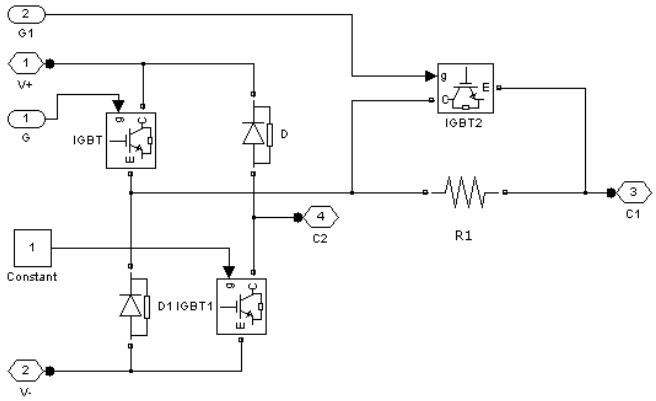

Fig. 5. Simulink block diagram of the bridge converter with the R_1 resistor, in case of using the Soft Switching technique.

3. CONTROL STRATEGIES

The control strategies applied in the simulations are: Current control, Hysteresis control, Soft Switching control technique and Hard Switching control technique respectively.

The case of using the R_1 resistor in series with the stator phase winding, when it is disconnected from the power supply, and also the case without it, were also illustrated in the simulation results.

Current control of a SR motor represents one of the basic control algorithms, in which the current from each motor phases is constant during the complete sampling period of the current control loop and the commutation of the phases is linked with the position of the rotor.

The phase current is controlled directly by a controller, which processes the difference between the

desired current and the actual current (the current error) and generates the proper comutation of the switches.

The profile of the phase current, together with the magnetization characteristic defines the generated torque and thus the motor speed, requiring electronic control for motor operation.

Adjusting of the current on each phase was done through a block circuit with hysteresis control, which allows a variation of current with a maximum of 2 A within the setpoint.

In case of Hard Switching control technique, PWM command signals are applied simultaneously to both transistors from each stator phase.

For Soft Switching control technique, one transistor is left turned on during the entire commutation period (upper switch) and PWM is applied to the other transistor (lower switch).

The simulation results are presented as follows.

4. SIMULATION RESULTS OBTAINED WITH MATLAB SIMULINK

Figure 6 and Fig. 7 illustrates the waveform of the current from one stator phase winding, for current regulator and hard switching control technique, at no-load, without and with R_1 series resistor, respectively. It can be observed that the waveform of the current through the stator phase is better in case of using R_1 resistor, when the slope of decreasing current becomes larger (Fig. 7), causing a rapid dissipation of the energy accumulated in the magnetic field of the considered stator phase winding (due to the decrease of the τ time constant circuit, since the disconnection of phase from the power supply).

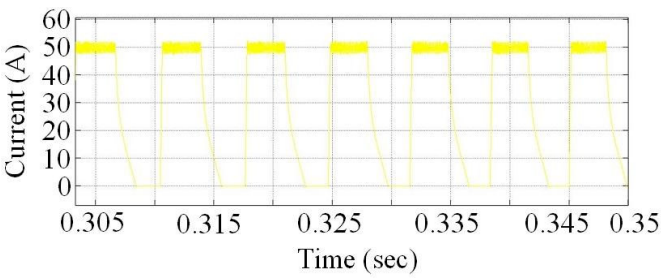

Fig. 6. Waveform of the current from one stator phase winding, for Hard Switching control technique, without R_1 series resistance.

The control signals for the upper and the lower transistors of the power stage (convertor bridge) define the phase voltage and thus the phase current.

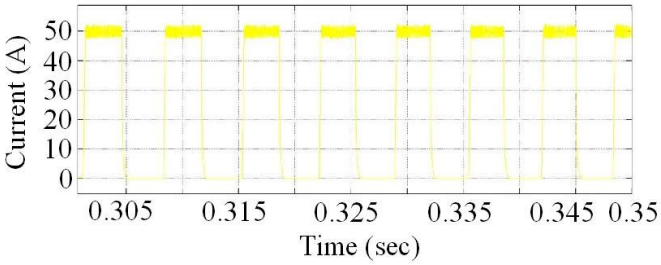

Fig. 7. Waveform of the current from one stator phase winding, for Hard Switching control technique, with R_1 series resistance.

Figure 8 and Fig. 9 illustrates the current ripple through a stator phase, with current regulator, for hard switching and soft switching control technique respectively. it can be observed that soft switching technique generates lower current ripple, compared to the hard switching technique and also, it produces lower acoustic noise. therefore, soft switching techniques are often preferred for motor operation.

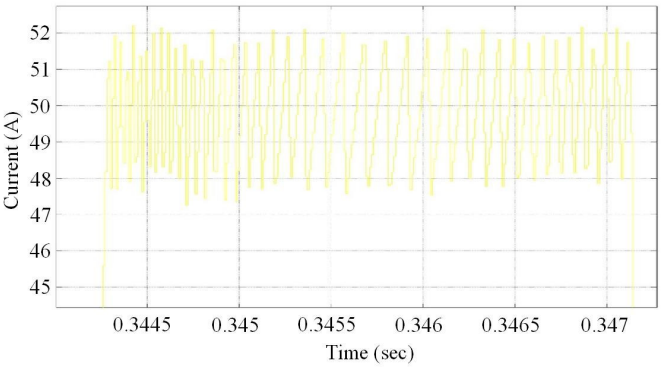

Fig. 8. Current ripple through a stator phase, for Hard Switching technique, with current regulator.

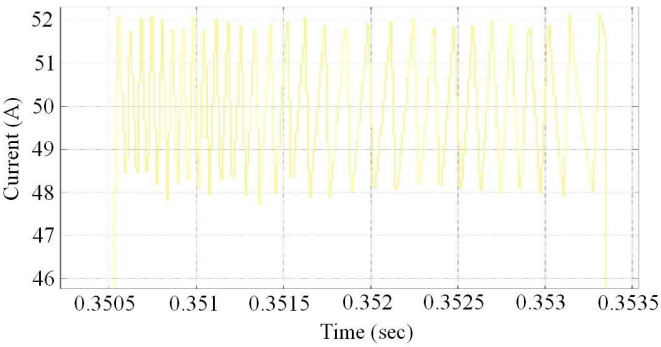

Fig. 9. Current ripple through a stator phase, for Soft Switching technique, with current regulator.

Figure 10 and Fig. 11 illustrates the corresponding waveforms of each magnetic flux stator phase, φ, the stator phase currents, I, the resulting electromagnetic

torque, T_e, angular velocity, ω, the rotor position angle, θ, stator phase voltages, U, for a current regulator control, in case of Hard Switching technique, without and respectively with R_1 series resistor, at no-load.

It can be observed in Fig. 10 that, when the R_1 series resistance is not connected, the average value of the developed motor torque is about 35 Nm, while in case of connecting R_1 resistor, this average torque value increases to about 39 Nm, as Fig. 11 illustrates, for the same motor operating conditions. Also, the torque ripple is less in case of connecting the R_1 series resistor.

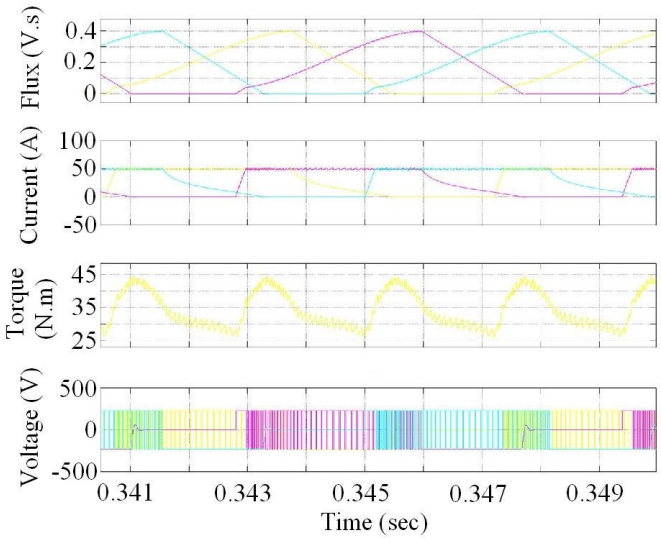

Fig. 10. Waveforms corresponding to each stator phase, for Hard Switching control technique, without R_1 series resistor.

The waveform of the currents through the stator phases is better with the resistor R_1, when it can be observed that the slope of decreasing current becomes larger (Fig. 11), causing a rapid dissipation of the energy accumulated in the magnetic field of the stator phase winding (due to the decrease of the τ time constant circuit, since the moment of time when disconnecting the phase from the power supply).

Figure 12 and Fig. 13 illustrates the corresponding waveforms of each magnetic flux stator phase, φ, the stator phase currents, I, the resulting electromagnetic torque, T_e, angular velocity, ω, the rotor position angle, θ, stator phase voltages, U, for a current regulator control, in case of Soft Switching technique, without and respectively with R_1 series resistor, for a load torque: $T_L = 20$ Nm.

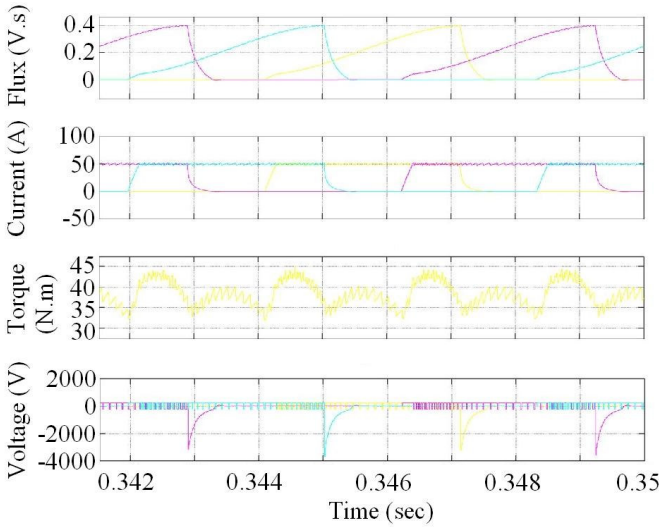

Fig. 11. Waveforms corresponding to each stator phase, for Hard Switching control technique, with R_1 series resistor.

In Fig. 12, it can be observed that, when the R_1 series resistance is not connected, the value of the developed motor torque is about 20 Nm, while in case of connecting the resistor R_1, as Fig. 13 illustrates, this torque value increases accordingly to about 40 Nm, for the same motor operating conditions. Also, the torque ripple is less in this second case.

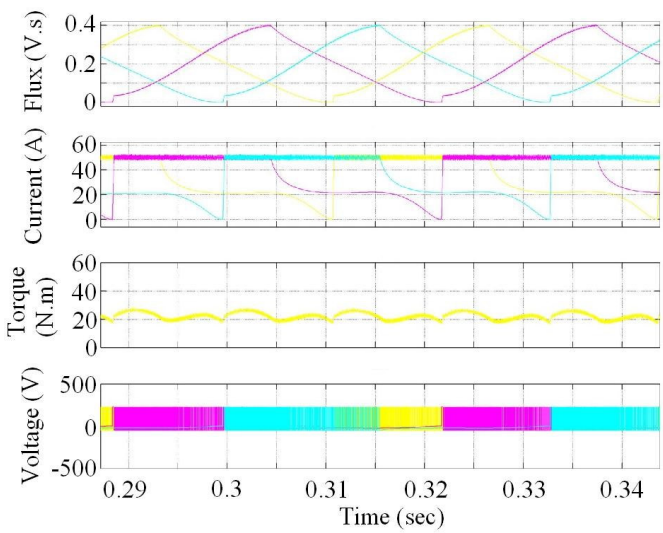

Fig. 12. Waveforms corresponding to each stator phase, for Soft Switching control technique, without R_1 series resistor.

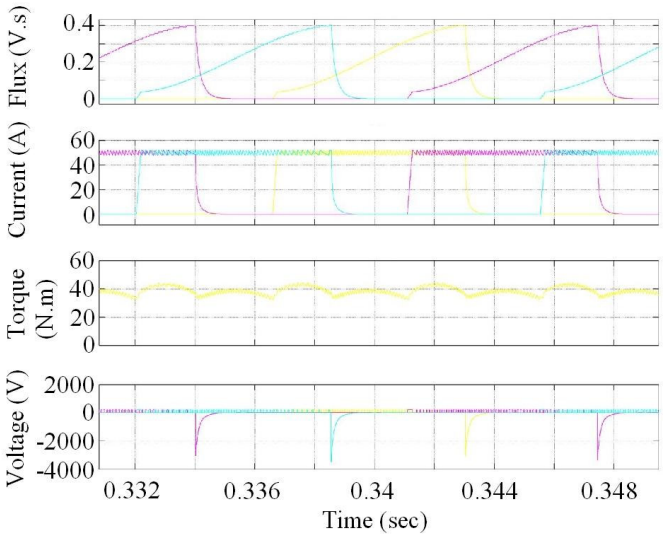

Fig. 13. Waveforms corresponding to each stator phase, for Soft Switching control technique, with R_1 series resistor.

5. CONCLUSION

From the simulations it can be observed that the mean value and waveform of electromagnetic torque, T_e, developed by the switched reluctance motor is dependent of proper choice of the turn on and turn off angles for each phase winding considered. Also, the developed torque is dependent with the waveform of current through each stator phase winding.

Thus, it can be seen that when connecting a R_1 = 100Ω series resistor, which came in series with the stator phase at the time of its disconnection from the power supply (by which moment of time, IGBT2 transistor that bypasses resistance R_1 while the phase is energized, it's turned off), the slope of decreasing current becomes larger, causing a rapid dissipation of energy accumulated in the magnetic field of the stator phase winding considered (due to the decrease of the τ time constant circuit, since the disconnection of phase).

Thus, it can be observed that the waveforms of the currents through the three phase stator windings and the resulting electromagnetic torque ripple are much improved when connecting a R_1 series resistance, compared to the case when does not.

Also, the average value of developed motor torque, for the same operating conditions of the electrical machine, increases in case of R_1 resistor, compared to the case when it is not. The main disadvantage of using this R_1 resistance is the amplitude of negative polarity voltage impulses self-induced that occur across each stator phase winding when disconnected it from the power source and respectivly when connecting the R_1 resistance in series with the phase, a value that depends on the accumulated energy in the magnetic field of the considered phase (basically the magnitude of current through the phase, when it is disconnected from the power supply and respectively the inductance phase) and the R_1 series resistance value. At high motor speeds, where the phase current amplitude is much smaller than when starting, also the values of these self-inducted voltages accordingly decreases.

ACKNOWLEDGEMENT

This paper was realised with the support of POSDRU CUANTUMDOC "DOCTORAL STUDIES FOR EUROPEAN PERFORMANCES IN RESEARCH AND INOVATION" ID79407 project funded by the European Social Found and Romanian Government.

REFERENCES

[1] Krishnan R., *Switched reluctance motor drives: modeling, simulation, analysis, design, and applications*, The Bradley Department of Electrical and Computer Engineering Fellow, Center for Organizational and Technological Advancement (COTA) Virginia Tech, Blacksburg, Virginia, TK2787 .R35 2001, ISBN 0-8493-0838-0.

[2] Miller T.J.E., *Electronic Control of Switched Reluctance Machines*, SPEED Laboratory, University of Glasgow, 2001.

[3] Lee B.S., Bae H.K., Vijayraghavan P., and Krishnan R., *Design of a linear switched reluctance machine*, Conf. Rec. IEEE Ind. Appl. Soc. Ann. Mtg., 1999, Oct. 2267–2274.

[4] Bae H.K., Lee B.S., Vijayraghavan P., and Krishnan R., *A linear switched reluctance motor: converter and control*, Conf. Rec. IEEE Ind. Appl. Soc. Ann. Mtg., 1999, Oct., 547–554.

[5] Richardson K.M., Pollock C., and Fowler J.O., *Design and performance of a rotor position sensing system for a switched reluctance marine propulsion unit*, Conf. Rec.IEEE Ind. Appl. Soc. Ann. Mtg.,Oct., 168–173, 1996.

[6] Xu L. and Bu J., *Position transducerless control of a switched reluctance motor using minimum magnetizing input*, Conf. Rec. IEEE Industry Applications Society Annual Meeting, 1997.

[7] Stephenson J.M. and Jenkinson G.C., *Single-phase Switched Reluctance Motor Design*, IEE Proc.-Electr. Power Appl., Vol. 147, No. 2, pp. 131 - 139, March 2000.

[8] Freescale Semiconductor Application Note, *3-phase Switched Reluctance Motor Control with Hall Sensors using a 56f80x, 56f8100 or 56f8300 device*, AN1912 Rev. 2, 9/2005.