ABOUT THE USE OF WOODEN BIOMASS OBTAINED BIO-ETHANOL IN DIESEL ENGINES

Assoc. Prof. Eng. ***Alexandru RACOVITZA****, PhD, Prof.* ***Laurentiu FARA****, PhD*

UNIVERSITY „POLITEHNICA“ – BUCHAREST

Abstract. Despite the fact that alcohols tend to be used as alternative fuels for Spark Ignition (SI) engines, with worldwide good implementation results, because of EU directive that rises the bio-fuels amount in classic fuels mixtures up to 20% in the years to come, researchers are strongly encouraged to extend their efforts in order to offer bio-alcohols fueling solutions to diesel engines either. The paper reveals the certain perspectives on the potential use of bio-ethanol produced by wooden bio-mass enzymathic fermentation as appropriate diesel engine fuel, in mixture with classic diesel fuel and bio-diesel. This documentation would like to connect the possibilities of bio-ethanol production capacity to diesel engines fueling technologies and to their experimental studies results in using alcohols by nowadays.
Keywords: wooden biomass, bio-ethanol, diesel engines, engine efficiency, low emissions.

1. INTRODUCTION

Despite the fact that ethanol represents an adequate fuel for SI engines due to its properties to mix with gasoline in a stabile and miscible fuel blend, new opportunities tend to be offered to this kind of fuel to be used in diesel engines either. Bio-ethanol represents a renewable fuel because of its great opportunities to be produced starting from the vegetal resources – crops and wooden trash. Fast growing poplars are used for their rapid regenerative cycle to reach the necessary biomass. Generally speaking about the use of bio-fuels, UE is strongly encouraging the substitution of the fossil fuels up to 20% by 2020.

In Romania, by Decision no. 935 from September 21, 2011 and updated December 28, 2012 related to the bio-fuels and bio-liquids usage, in the very next future diesel fuel has to contain 5% bio-fuels. In terms of diesel engines, which provide a better efficiency, successful efforts to replace diesel fuel have been conducted on regenerative, based on fatty acids fuel, well known as bio-diesel. The deficits related to the use of bio-diesel are connected to its higher production costs, lower heating value and higher NO_x emissions. Moreover, due to its obtaining methods, bio-diesel cannot be considered as a 100% regenerative fuel. Comparing together all these aspects, bio-ethanol reveals itself as an appropriate fuel for diesel engines, in mixtures with classic diesel fuel as with bio-diesel. This is a completely regenerative fuel and it is less expensive than bio-diesel. In diesel engines, the use of alcohols as single fuel seams a very difficult task. Thus, is rather to use certain dual fuelling systems with alcohol as secondary fuel.

2. BIO-ETHANOL SPECIFIC PRODUCTION METHODS

Ethanol could be easily produced from biomass using two well-known procedures: the hydrolysis and the fermentations of the sugar compounds existing in the biomass composition. The biomass resulted from the vegetal species contains a complex mixture of carbohydrate polymers known as cellulose, hemicellulose and lignin. In order to obtain sugar components from biomass, this has to be treated with acids or enzymes. Thus, those polymers lead to the sucrose process, which subsequently leads to the alcohol production. There are three methods to extract sugar from biomass [1]:

A) *Hydrolysis with concentrated acids* (Arkhanol Method). The biomass is treated with sulphuric acid (70-77% concentration) after being dried to 10% humidity. One part of biomass corresponds to 1.25 parts acid at 50^0C temperature. Water is added to dilute the acid to 25-30%, and then the mixture is heated up to 100^0C for one hour. The obtained gelatin is pressed in order to remain only the sugar-acid mixture, their separation being succeeded by using a chromatographic column;

B) *Hydrolysis with diluted acids.* Is one of the most simple and efficient methods to obtain ethanol. The diluted acid is used in order to extract the sucrose from the biomass. In the first step sulphuric

acid (0.7% concentration) is used at 190^0C for the hemicellulose hydrolysis. The second stage consists in the cellulose hydrolysis with sulphuric acid at 215^0C and 0.4% concentration. The liquid resulted from hydrolysis is then neutralized and reused in the process.

C) *The hydrolysis of the biomass using the enzymes fermentation.* It is a new and revolutionary process at its beginning, being actually developed with high costs and investments.

The reactions through which finally ethanol could be obtained by enzymatic fermentation of the sugar compounds are described as following:

$$\mathbf{C_{12}H_{22}O_{11}}\,(\text{sucrose}) + \mathbf{H_2O} \rightarrow$$
$$\textbf{(Invertasys/catalyser)}$$
$$\rightarrow \mathbf{C_6H_{12}O_6}\,(\text{fructose}) + \mathbf{C_6H_{12}O_6}\,(\text{glucose})$$

$$\mathbf{C_6H_{12}O_6}\,(\text{fructose/glucose}) \rightarrow$$
$$\textbf{(Zimasys/catalyser)}$$
$$\rightarrow \mathbf{2C_2H_5OH}\,(\text{ethanol}) + \mathbf{2CO_2} \uparrow$$

The ethanol obtained by applying the fermentation reactions contains also a significant water amount [2]. The water is supposed to be eliminated by a process of fractioned distillation. Due to the fact that at normal atmospheric pressure ethanol has a lower vaporization temperature (78.5°C) than water (100°C), it means that it could be vaporized before water and subsequently condensed and separated from water.

3. BIO-ETHANOL USED IN DIESEL ENGINES

In Romania, by Decision no. 935 from September 21, 2011 and updated December 28, 2012 related to the bio-fuels and bio-liquids usage, in the very next future diesel fuel has to contain 5% bio-fuels. Respectively, European Union Directives increase the rate of bio-fuels inside the standard diesel fuel composition up to 20% in the year 2021.

In terms of diesel engines, which provide a better efficiency, successful efforts to replace diesel fuel have been conducted on regenerative, based on fatty acids fuel, well known as bio-diesel. The deficits related to the use of bio-diesel are connected to its higher production costs, lower heating value and higher NO_x emissions. Moreover, due to its obtaining methods, bio-diesel cannot be considered as a 100% regenerative fuel. Comparing together all these aspects, bio-ethanol reveals itself as an appropriate fuel for diesel engines, in mixtures with classic diesel fuel as with bio-diesel. This is a completely regenerative fuel and it is less expensive than bio-diesel. In diesel engines, the use of alcohols as single fuel seams a very difficult task. Thus, is rather to use certain dual fuelling systems with alcohol as secondary fuel. Tests with ethanol have been conducted based on three main methods: the mixtures method, diesel-carburettor method and double injection method. The first one is difficult to apply because of the lack of mixture homogeneity and miscibility (see Fig.1). This consists in the fact that ethanol replacement volume is higher than that of diesel fuel to be replaced. Thus, above 40% volumetric ethanol ratio, the fuel blend is not stable and without expensive additives the compounds tend to separate [3]. Even the small amounts of water existing in ethanol increase the rate of mixture compounds separation.

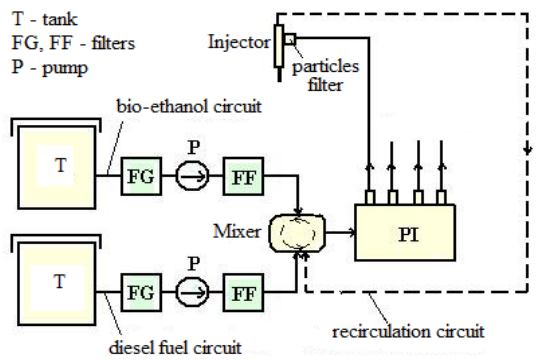

Fig. 1. Theoretical scheme of the mixtures fuelling method.

The second fuelling method combines diesel classic injection with ethanol vapour admission together with the air through a special carburettor (see Fig. 2). Never the less it is a design complication but the ethanol replacing rate could reach about 50%. This upper limit has to be imposed because ethanol combustion is developing at higher velocities comparing to diesel combustion and the engine operation turns into a rough and noisy state [4].

The third fuelling method theoretically proves itself to be the most successfully in terms of diesel fuel replacement (up to almost 90% volumetric participation) due to the complete separation of both injection timings (see Fig. 3). This looks possible because the engine ignition is ensured by the pilot diesel injection followed by the alcohol secondary injection. There is obviously the same engine design complication because of the need to add supplementary injection system compounds (for each cylinder injector, high pressure pipe and for the engine assembly a second injection pump). Despite the very large amount of ethanol replacing rate, this could be in fact the major problem of engine fuelling system because the lack of alcohols

lubricating capacities. This could be solved only by using certain (expensive) additives in ethanol or by covering the active injection pump pressure elements with anti-corrosive materials, which leads to the same problem of higher costs [5].

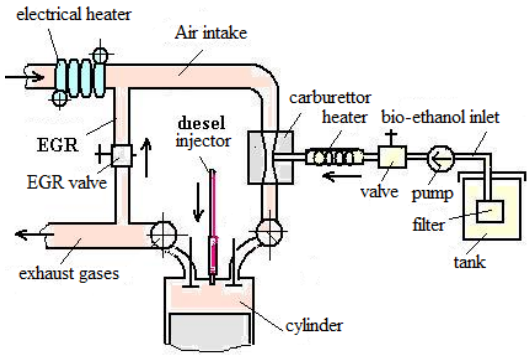

Fig. 2. Theoretical scheme of diesel-carburettor fuelling method.

Fig. 3. Double injection fuelling method applied to the experimental fuelling system of a MAN heavy-duty diesel truck engine.

Reconsidering the potential of using bio-ethanol in dual or multi-fuel mixtures, diesel engine could provide good performance and efficient operation. One solution could be to mix bio-ethanol together with classic diesel fuel and bio-diesel, the alcohol becoming the linking chemical element between bio-diesel and diesel fuel. Recent studies have revealed the possibility of using blends made of 30% bio-diesel, 7.5% bio-ethanol and diesel fuel with satisfactory results [6]. There is also a certain indication of mixing diesel fuel with 7.7% bio-ethanol and 0.6% unrevealed chemical additive. Other authors define the optimum used bio-ethanol percentage in between 10% and 20%, combined with 10% bio-diesel fraction [7]. Romanian researchers tend to consider butane-oil as appropriate additive between bio-ethanol and diesel fuel. One type of „flexi-fuel" (flexible fuel) should be possible to be prepared based on the presence or not of bio-diesel in common mixtures with bio-ethanol and classic diesel fuel.

4. CONCLUSIONS

Bio-ethanol produced by in-territory sources and technologies proves to be itself a promising new alternative fuel to be used in diesel engines, despite the fact that bio-alcohols are likely used in mixtures with gasoline in already standardized Spark Ignition (SI) automotive engine fuels.

Bio-ethanol combustion process inside diesel engine cylinder leads to the limitation of main exhaust gas emissions (specially of smoke and NO_x), as the intended research will undoughtly prove.

In-territory bio-ethanol production could be sustained by wooden biomass production capacities (cultures of trees species like poplar and willow are easy to grow and harvest) despite the fact that enzymathic fermentation process shows itself to be still expensive due to the costs of the used enzymes.

Future work will consist in the implementation of the most appropriate fuelling method with bio-ethanol for a diesel commercial vehicle engine, based on direct testing results.

REFERENCES

[1] Hubcă, Gh., Lupu, A., Cociașu, Anton C., *Bio-fuels: biodiesel, bioethanol, sun diesel* (in Romanian) MatrixRom Press, Bucharest, Romania (2008).

[2] Cincu, C., Fara, L., Racovitză, A.C., Lobonț, L., *Bioethanol obtained from wooden biomass. An appropriate alternative fuel for spark ignition engines*, Cellulose Chemistry and Technology, no.45 (1-2)/2011, The Romanian Academy Press, Iasi (2011), Romania.

[3] Racovitză, A., *New concepts and design in diesel injection systems to increase engines efficiency*, The 4th International Conference MSE 2009, Vol. 1, pp.67-71, June, 4-6 (2009), ULBS Sibiu, Romania.

[4] Racovitză, A., *Bio-ethanol used in engines and in the fuel cells*, Termotehnica, Revue, Year XIV, no.1/2010, pp.42-45, Bucharest, Romania.

[5] Pană, C., Negurescu, N., Popa, M.G., Racovitză, A., Boboc, G., *Improvement of alcohols use in heavy-duty diesel engine operation: High efficiency and low emissions*, Buletinul Institutului Politehnic Iași, Secția Construcția de Mașini, Fascicula 6D, Tomul L(LIV), pag.181-187, (2004), Universitatea Tehnică Gh.Asachi, Iași.

[6] Rodriguez, J.C, *Life Cycle Assessment of wood-based ethanol-diesel blends (E-Diesel)*, International MSC In Environmentally Sustainable Process Technology, Chalmers University of Technology, Sweden (2003).

[7] de Caro, P.S, Mouloungui Z., Vaitilingom G., Berge, J.Ch. (2001), *Interest of combining an additive with diesel – ethanol blends for use in diesel engines*, Elsevier, Fuel 80(2001), 565-574 (2001).