AN ANALYTIC METHOD FOR TWO-PORT PASSIVE NETWORK COMPUTING FOR ANALYSIS OF COUPLED OSCILLATORS

Mihai IORDACHE[1], Lucia DUMITRIU[1], Lucian MANDACHE[2], Dragos Niculae[1], Jean-Marie PAILLOT[3], David CORDEAU[3]

[1]Politehnica" University of Bucharest, Romania
[2]University f Craiova, Romania,
[3]University of Poitiers, Angoulême, France,

ABSTRACT. Voltage controlled oscillators are present in the most of the digital communication system. In our days, they are used to control the phase in microwave antenna arrays. Researches are made so that a particular phase shift can be obtained by choosing the free-running frequencies of the oscillators in the array. In this paper, we have analyzed, in different ways, in time and also in frequency domain, the phase shift between output voltages of each oscillator. Because the coupling circuit is a two-port passive complex network, a new software which can generate in full-symbolic or numeric-symbolic form the *Y, Z, H,* and fundamental parameters of a two-port structure was implemented. Our procedure can also determine all the resonant frequencies of any two-port configuration as functions of the two-port circuit parameters. The procedure is based on the modified nodal equations in full-symbolic form and/or on the state equations in full-symbolic normal form, in the frequency domain. For this procedure a new program called ANCSYANP (Analog Circuit Symbolic Analysis Program) was elaborated. Some illustrative examples are done.

Keywords: symbolic analysis, phase shift, synchronization frequency, Van der Poll oscillator, *Y* parameters, time analysis, frequency analysis.

1. INTRODUCTION

Voltage controlled oscillators are important components in the most digital communication system. Recently microwave oscillators are used to control the phase in microwave antenna arrays. beam steering methods. A voltage controlled oscillator (VCO) is a circuit that produces an oscillatory output [1 - 8, 11, 12]. The frequency of the output signal depends on the level of an input voltage signal supplied to the VCO. The range of the frequency is chosen according to our purpose, but mainly VCO's produce high frequency signals.

The radiation pattern of a phased antenna array is steered in a particular direction by controlling the phase gradient existing between the signals applied to adjacent elements of the array. The required phase shift between output voltages of each oscillator can be obtained by detuning the free-running frequencies of the outermost oscillators in the array [2, 3]. Furthermore, in [4-8] it is shown that the resulting inter-stage phase shift does not dependent on the number of oscillators in the array.

The aim of this paper is to present the symbolic analysis of the array of coupled Van der Pol oscillators, considering the coupling circuit as a passive two-port circuit. Therefore, a new software which can generate in full-symbolic or numeric-symbolic form the *Y, Z, H,* and fundamental parameters of any two-port structure was developed. The procedure is based on the modified nodal equations of the entire circuit formulated in full-symbolic form and/or on the state equations in full-symbolic normal form, in the frequency domain.

Because, in sinusoidal behaviour the two voltage-controlled nonlinear resistors of each pair of two coupled Van der Poll oscillator can be substituted by two linear resistors having negative resistances. In this case the oscillator circuit can be analyzed by the complex representation method [3, 6 - 10].

The active parts of the two Van der Pol oscillators are modeled by two voltage-controlled nonlinear resistors (see Fig. 1), [3, 6, 7]. The nonlinear characteristics of the two voltage-controlled nonlinear resistors are expressed as it follows:

$$\begin{aligned} i_{nel1} &= -av_{C_1} + bv_{C_1}^3 \\ i_{nel2} &= -av_{C_2} + bv_{C_2}^3 , \end{aligned} \qquad (1)$$

where $-a$ is the negative conductance necessary to start the oscillation and b a parameter used to model the saturation phenomenon.

Assuming the voltages have sinusoidal oscillation so that $v(t) = A.\cos(\omega_0 t)$, the expressions of the currents through the two nonlinear resistors can be written as:

$$i(t) = \left(-a + \frac{3}{4}bA^2 \right) A\cos(\omega_0 t) + b\frac{A^3}{4}\cos(3\omega_0 t). \qquad (2)$$

Therefore, in the sinusoidal behavior (neglecting the third harmonic) the two nonlinear resistors can be modeled by two linear resistors with the conductances:

$$G_{01} = -a + \frac{3b}{4}A_1^2 \; ; \; G_{02} = -a + \frac{3b}{4}A_2^2, \qquad (3)$$

where A_1 and A_2 are magnitudes of voltages v_1 and v_2.

In this paper, we have analyzed, in different ways, in time and also in frequency domain, the phase shift between output voltages of each oscillator.

The paper is organized as follows: a system of two Van der Pol oscillators coupled through a *RLC* circuit is presented in section II. In section III, the symbolic generation of the coupling circuit parameters with the new software is described followed by conclusions.

2. TWO COUPLED VAN DER POL OSCILLATORS THROUGH A SERIES RLC NETWORK

The base of this analysis is represented by VCO's that have different free-running frequencies and are able to lock at a common frequency thanks to coupling circuits, [1, 2, 4, 8]. Two oscillators coupled through a resonant network can be synchronized at the same frequency. But the synchronization is highly dependent on the coupling network, [1 - 8, 11, 12, 14]. Coupled microwave oscillators have been modeled as simple Van der Pol oscillators [3, 6, 7]. This model provides satisfactory results for many applications. Also the simplicity of the equations is very helpful.

Figure 1 represents two oscillators coupled through a series RLC network. These oscillators are considered identical, except for their free-running frequencies. Thus, this work aims to determine values for these frequencies and for that of the coupling circuit that result in frequency locking.

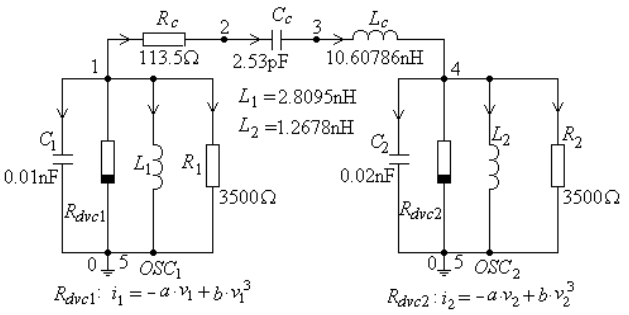

Fig. 1. Two parallel resonant circuits coupled through a series RLC network.

The resonant frequencies for the two oscillators are:

$$f_{01} = \frac{1}{2\pi\sqrt{C_1 L_1}} = 950\,\text{MHz}, \; f_{02} = \frac{1}{2\pi\sqrt{C_2 L_2}} = 1000\,\text{MHz}. \qquad (4)$$

Resonant frequency of the RLC coupling circuit is:

$$f_{0c} = \frac{1}{2\pi\sqrt{C_c L_c}} = 972\ \text{MHz}. \qquad (5)$$

In figure 2 the waveforms for the output voltages corresponding to the two oscillators are shown and in figure 3 the Fourier characteristic of the two waveforms is presented.

Performing Spice simulation (or Matlab simulation based the state equations, [9, 10, 13, 14]) we get the magnitudes values A_1 = 3.67 V, A_2 = 3.6557 V (Fig. 2), and the synchronization frequency f_s = 982.196 MHz for the initial conditions $v_{C1}(0)$ = 2.0 V and $v_{C2}(0)$ = 1.0 V (Fig. 3). According to the assumptions presented in Section I, in sinusoidal behaviour the two voltage-controlled nonlinear resistors can be substituted by two linear resistors having the expressions (3). In this case, the circuit in Fig. 1 can be analyzed by the complex representation method [9, 10].

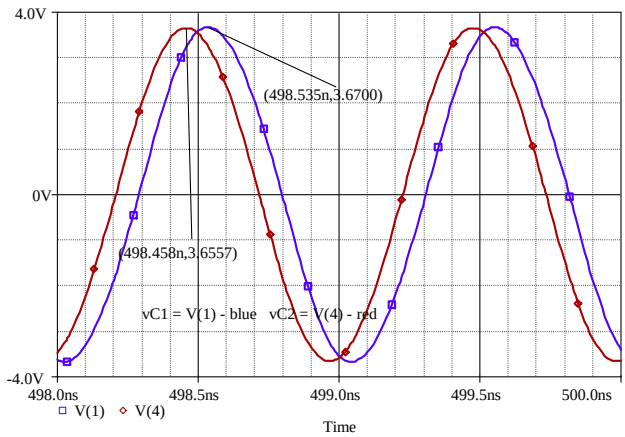

Fig. 2. Waveforms present at the output of each oscillator in the case of two oscillators array, v_{C1} = $V(1)$ – blue and v_{C2} = $V(4)$ - red.

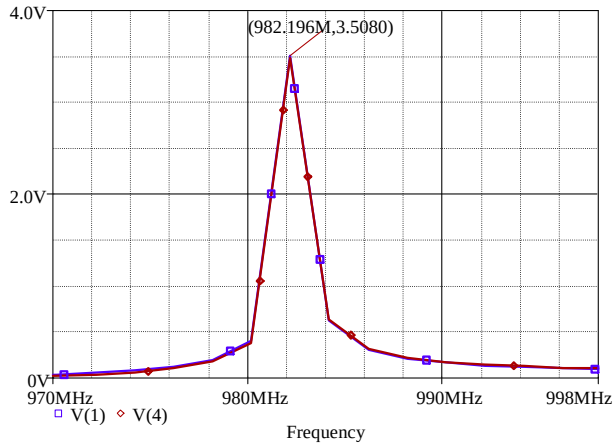

Fig.3. Synchronization frequency.

The complex admittances, in the sinusoidal behaviour, corresponding to two oscillators and to coupled RLC circuit have the following expression:

$$\begin{aligned}
\underline{Y}_1 &= j\omega C_1 - a + \frac{3b}{4}A_1^2 + \frac{1}{j\omega L_1} + \frac{1}{R_1};\\
\underline{Y}_2 &= j\omega C_2 - a + \frac{3b}{4}A_2^2 + \frac{1}{j\omega L_2} + \frac{1}{R_2};\\
\underline{Y}_c &= \frac{\omega^2 C_c}{R_c C_c \omega + j\left(C_c L_c \omega^2 - 1\right)}.
\end{aligned} \tag{6}$$

For the circuit in Fig. 1 the equations in complex form, when the two voltage-controlled nonlinear resistors are substituted by two linear resistors according to (3), can be written as:

$$\begin{aligned}
\underline{Y}_1\underline{V}_1 &= -\underline{Y}_c\underline{V}_1 + \underline{Y}_c\underline{V}_2\\
\underline{Y}_2\underline{V}_2 &= \underline{Y}_c\underline{V}_1 - \underline{Y}_c\underline{V}_2.
\end{aligned} \tag{7}$$

If we denote $\underline{X} = \frac{\underline{V}_1}{\underline{V}_2} = \frac{A_1}{A_2}e^{j\varphi_{21}}$ and take the numeric values of the circuit parameters from Fig. 1, and a = 0.0085, b = 0.00071, then (7) becomes a system of two equations with two unknowns, $\underline{X}$ and ω. Solving these algebraic equations, we obtained the following resuls:

$$\begin{aligned}
&\underline{V}_{os1}/\underline{V}_{os2} = \underline{X}_{c_analytic} = 0.8786 + 0.4674j \Rightarrow\\
&\begin{cases}
\varphi_{21_analytic} = \alpha_{v_{os1}} - \alpha_{v_{os2}} = \arg\left(\underline{V}_{os1}/\underline{V}_{os2}\right) = -28.028^\circ\\
V_{os1}/V_{os2} = 0.995
\end{cases}\\
&\omega_{s_analytic} = 0.6178 \cdot 10^{10} \text{ rad/s.}
\end{aligned} \tag{8}$$

In order to compute the phase shift, using Spice or Matlab simulation, we can use the following relation:

$$\varphi_{21\_Spice} = f_s \cdot \left(t_{os1\_m} - t_{os2\_m}\right) \cdot 360, \tag{9}$$

where f_s - is synchronisation frequency (see Fig. 3) and t_{os1_m} (t_{os2_m}) - represents the time moment when the first (second) oscillator voltage is maximum (see Fig. 2). Replacing the numeric values, the result is:

$$\varphi_{21\_Spice} = -27.226^\circ. \tag{10}$$

Taking into account the amplitudes of the output voltages, the ratio of these amplitudes has the value:

$$\frac{V_{0s1m}}{V_{os2m}} = \frac{3.7}{3.6557} = 1.0121. \tag{11}$$

We can remark the good agreement between the results obtained by Spice simulation and by our procedure.

R. York proves in [1, 5, 8] that the ability of two oscillators to lock to a common frequency is affected by the following parameters:

$\lambda_0 = \frac{1}{G_0 R_c}$ - the coupling constant, with G_0 being the first-order term of the Van Der Pol nonlinear conductance;

$\omega_a = \frac{G_0}{2 \cdot C_i}$ - is the bandwidth of the oscillator i;

$\omega_{ac} = \frac{G_0}{2 \cdot C_c}$ - represents the bandwidth of the coupling circuit;

$\omega_c = \frac{R_c}{2 \cdot L_c}$ - is the bandwidth of the unloaded coupling circuit.

In the following, the oscillators free-running frequencies ω_{01} and ω_{02}, and the synchronization frequency of the system ω_s, are referred to the frequency of the coupling circuit, of the oscillators, ω_{0c}, using the substitutions below:

$$\begin{aligned}
&\Delta\omega_{01} = \omega_{01} - \omega_{0c},\ \Delta\omega_{02} = \omega_{02} - \omega_{0c},\\
&\Delta\omega_c = \omega_s - \omega_{0c}
\end{aligned} \tag{12}$$

The formula proposed by R. York, [1, 5, 8], to compute the phase shift between the two oscillators has the following expression:

$$\varphi_{21\_York} = \arctan\left(\frac{\frac{\Delta\omega_{02}}{\omega_a} + \frac{\Delta\omega_c}{\omega_{ac}}\left(1 - A_2^2 - \frac{\omega_{ac}}{\omega_a}\right)}{1 - \lambda_0 - A_2^2 - \frac{\Delta\omega_c \Delta\omega_{02}}{\omega_{ac}\omega_a} + \frac{\Delta\omega_c{}^2}{\omega_{ac}\omega_a}}\right) \tag{13}$$

where A_2 is the magnitude of the output voltage corresponding to the second oscillator.

Using the numeric values of the circuit parameters corresponding to the circuit in figure 1, the result is:

$$\varphi_{21\_York} = -27.357^\circ \tag{14}$$

The value of shift phase obtained by York's procedure is very close to the values given by the above two techniques, the errors being very small.

$$\begin{aligned}
&\varepsilon_X = -1.668\ [\%];\ \varepsilon_{omega} = 0.163\ [\%];\\
&\varepsilon_{\varphi_{21_analytic}} = 2.945\ [\%];\ \varepsilon_{\varphi_{21_York}} = 0.48\ [\%];
\end{aligned} \tag{14}$$

3. TWO COUPLED VAN DER POL OSCILLATORS THROUGH A TWO-PORT PASSIVE NETWORK

We consider the circuit represented in Fig. 4. In this case the coupling circuit is a two-port passive network.

Performing Spice simulation (or Matlab simulation based the state equations, [10, 11]) we get the magnitudes values A_1 = 3.1891V, A_2 = 3.69, and the synchronization frequency f_s = 908.247MHz for the initial conditions $v_1(0)$ = 2.0 V and $v_2(0)$ = 1.0 V, as it shown in Fig.5 and in Fig. 6.

According to the assumptions presented in Section I, in sinusoidal behaviour the two voltage-controlled nonlinear resistors from Fig. 4 can be substituted by two linear resistors having the expressions (3). Thus, the circuit in Fig. 4 can be analyzed by the complex representation method [9, 10].

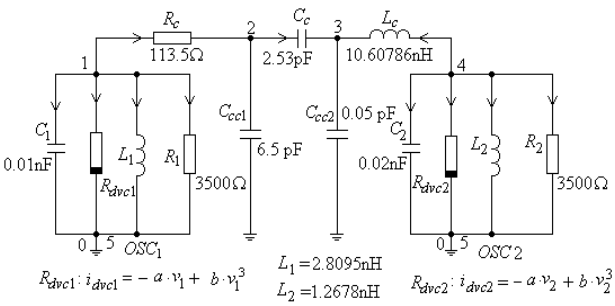

Fig. 4. Two parallel resonant circuits coupled through a two-port passive network

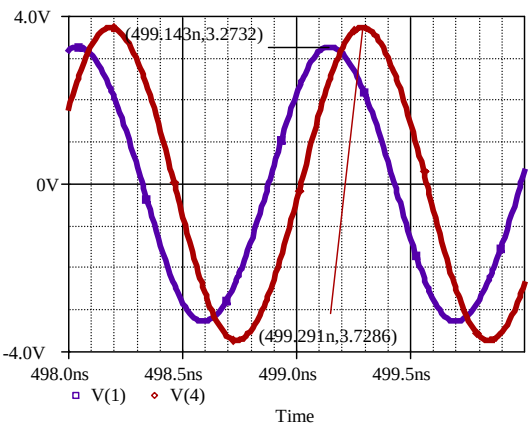

Fig. 5. Waveforms present at the output of each oscillator in the case of two oscillator array from Fig. 4, v_{C1} = $V(1)$ – blue and v_{C2} = $V(4)$ - red.

In order to automatically generate (in symbolic or numeric-symbolic form) the *Y*, *Z*, *H*, and fundamental parameters associated to the passive two-port which model the coupling circuit, we adapted the general software - ANCSYANP (Analog Circuit Symbolic Analysis Program) [10]. The new analysis tool based on the modified nodal analysis (MNA) generates, starting from the circuit net list, the *Y*, *Z*, *H*, and fundamental parameters, for any linear and/or nonlinear time-invariant two-port analog circuit, in symbolic form. It is an interactive tool that combines symbolic and numeric computational techniques, and which uses the facilities of the symbolic simulator Maple to manipulate the symbolic expressions.

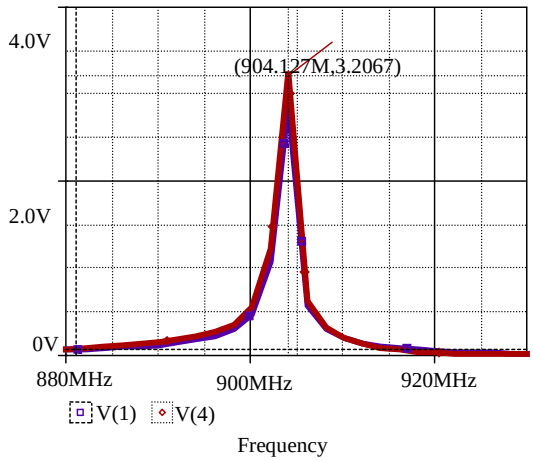

Fig. 6. Synchronization frequency obtained by a Fourier analysis.

Because the coupling network in Fig. 4 is a two-port passive circuit, in order to generate *Y* parameters of this circuit we use the ANCSYANP**,** [10].

In order to generate the *Y* parameters by using the ANCSYANP program we take into accond the circuit shown in Fig. 7.

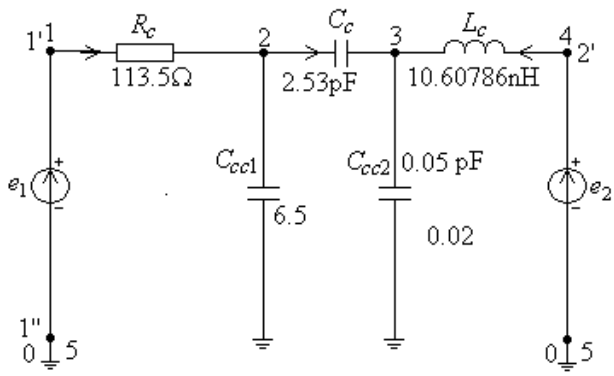

Fig. 7. The equivalent circuit scheme for the computing of the *Y* parameters.

Running ANCSYANP all transfer admittances in full symbolic form are obtained. The expressions of these transfer admittances have the following structure:

```
Y11 :=ω*((-Cc*Lc*Ccc1-Ccc1*Lc*Ccc2-Ccc2*
  Lc*Cc)* ω^2+Ccc1+Cc)*j/(1.-j*(Ccc2*
Lc*Ccc1*Rc+Ccc2*Lc*Cc*Rc+Cc*Lc*Ccc1*Rc*ω^3+
(-Ccc2*Lc-Cc*Lc)*ω2+(Ccc1*Rc+Cc*Rc*ω*j);
Y12:=-j*ω*Cc/(1-j*(Ccc2*Lc*Ccc1*Rc+Ccc2
  *Lc*Cc*Rc+Cc*Lc*Ccc1*Rc)*ω^3+(-Ccc2*
  Lc-Cc*Lc)*ω^2+(Ccc1*Rc+Cc*Rc)* ω*j);
Y12:=-j*ω*Cc/(1-j*(Ccc2*Lc*Ccc1*Rc+Ccc2
  *Lc*Cc*Rc+Cc*Lc*Ccc1*Rc)*ω^3+(-Ccc2*
```

(15)

```
Lc-Cc*Lc)*ω²+(Ccc1*Rc+Cc*Rc)* ω*j);
Y22 := ω((Cc*Ccc2*Rc+Ccc1*Rc*Cc+Ccc2*
Ccc1*Rc)*ω*j+Cc+Ccc2)*j/(1-j*(Ccc2*
Lc*Ccc1*Rc+Ccc2*Lc*Cc*Rc+Cc*Lc*
Ccc1*Rc)* ω³+(Ccc2*LcCc*Lc)*ω²+
(Ccc1*Rc+Cc*Rc*ω*j);
```

The resonant frequencies corresponding to the transfer admittances (15) have the following values:

$$\begin{aligned} f\_rez\_Y11 &:= \{0.9699\ 10^{9}, 0.1142\ 10^{10}\} \\ f\_rez\_Y12 &:= \{0.9699\ 10^{9}\} \\ f\_rez\_Y21 &:= \{0.9699\ 10^{9}\} \\ f\_rez\_Y22 &:= \{0.1137\ 10^{10}\} \end{aligned} \tag{16}$$

The resonant frequencies of the transfer admittances (15) have the values near to the value of the synchronization frequency.

For the circuit in Fig. 4 the equations in complex form, when the two voltage-controlled nonlinear resistors are substituted by two linear resistors according to (3), can be written as:

$$\begin{aligned} \underline{Y}_1\underline{V}_1 &= -\underline{Y}_{11}\underline{V}_1 - \underline{Y}_{12}\underline{V}_2 \\ \underline{Y}_2\underline{V}_2 &= -\underline{Y}_{21}\underline{V}_1 - \underline{Y}_{22}\underline{V}_2, \end{aligned} \tag{17}$$

where: $\underline{Y}_1$ and $\underline{Y}_2$ are the complex admittances corresponding to the two oscillators, having the expressions (6) and $\underline{Y}_{11}$, $\underline{Y}_{12}$, $\underline{Y}_{21}$ and $\underline{Y}_{22}$ are the complex transfer admittances corresponding to the coupling circuit between the two oscillators in Fig. 4, given by the relations (15).

If we denote $\underline{X} = \frac{\underline{V}_1}{\underline{V}_2} = \frac{A_1}{A_2} e^{j\varphi_{21}}$ and take the numeric values of the circuit parameters from Fig. 4, and a = 0.009, b = 0.0007, A_1 = 3.2732 V, and A_2 = 3.7286 V, then (4) becomes a system of two equations with two unknowns, $\underline{X}$ and ω.

The results obtained by solving the equations (17) and by Spice or Matlab simulation (see relation (9)) have the following structure:

$$\begin{aligned} &\underline{X}_{analytic} = 0.6379 + 0.6029\,j; \\ &X_{analytic} = 0.8777;\ X_{Spice} = 0.8784 \\ &\omega_{analytic} = 57.0 \cdot 10^{8}\ \text{rad/s}; \\ &\omega_{Spice} = 56.78 \cdot 10^{8}\ \text{rad/s}; \\ &\varphi_{21\_analytic} = 43.4°;\ \varphi_{21\_Spice} = 44.92°; \\ &f_{s\_Spice} = 0.904127\ \text{GHz}. \end{aligned} \tag{18}$$

We denote that the results obtained by the two procedures are very closed.

4. CONCLUSIONS

The way how oscillators work and the phase shift are very important in orienting the radiation pattern, in a phased antenna array, in a certain direction. Researches are made so that a particular phase shift can be obtained by choosing the free-running frequencies of the oscillators in the array. In this paper different types of analysis were applied in order to compare the results obtained and also, for a better understanding of the influence the parameters have in the oscillators' synchronization. The main limit we encounter is that the analysis is made around the synchronization frequency. Thus, there is a risk of malfunction outside this region.

Using suitable software we performed the symbolic analysis of an antenna array in order to compute in symbolic form the coupling circuit parameters. The existing software was enhanced with dedicated routines for generating the *Y* (admittance), *Z* (impedance), *H* (hybrid parameters) and fundamental parameters of the coupling networks, which are modeled by passive linear two-port circuits.

The results obtained by Spice simulation or by Matlab simulation (based on the state equations) are very closed to the ones obtained by frequency analysis (complex analysis) when the two voltage-controlled nonlinear resistors are modeled by two linear resistors having the conductances as the relations (3).

The symbolic expressions of the coupling circuit parameters are useful in writing the dynamic equations of an array of coupled oscillators for the automatic design of these devices.

BIBLIOGRAPHY

[1] J. Lynch and R. York, "Synchronization of oscillators coupled through narrowband networks", IEEE Transactions on Microwave Theory and Techniques, vol. 49, No.2, pp. 237-249, February 2001

[2] K. Kurokawa, "Injection locking of microwave solid-state oscillators", Proceedings of the IEEE, vol. 61, No. 10, pp. 1386-1410, October 1973

[3] N. Tohme, J.M. Paillot, D. Cordeau and P. Coirault, "Analysis of the frequency locking region of coupled oscillators applied to 1-D antenna arrays", 38th European European Microwave Conference, Amsterdam, Oct. 2008, pp. 353-361.

[4] P. Liao and R. York, "Beam scanning with coupled vcos," IEEE Proc.Antennas Propagation Soc. Int. Symp., vol. 2, pp. 836–839, June 1994.

[5] R. York and T. Itoh, "Injection and phase-locking techniques for beam control," IEEE Trans. Microwave Theory Tech., vol. 46, pp. 1920–1929,Nov.1998.

[6] F. Hutu, D. Cordeau and J.M. Paillot, "A 2.4 GHz active phase shifter architecture for smart antennas control", IEEE MTT Microwave Symposium, Boston, USA, pp. 821-24, June 2009.

[7] Nidaa Y. Tohme, *Etudes comportementales et réalisation d'un réseau d'oscillateurs couplés et de déphaseurs actifs appliqués à la command d'un réseau d'antennes linéaire*, Thèse de Doctorat, Poitiers, 2006.
[8] R. York, "Nonlinear analysis of phase relationships in quasi-optical oscillator arrays," IEEE Trans. on Microwave Theory and Techniques, vol. 41, Oct. 1993, pp. 1799–1809.
[9] Lucia Dumitriu, M. Iordache, I. Matei, "Symbolic tool for analysis and design of analog linear circuits", Revue Roum. Sci. Techn.- Électrotechn. et Énerg., Tome 45, no. 2, Bucarest, 2000, pp. 253-265.
[10] M. Iordache, Lucia Dumitriu, I. Matei, *ANCSYANP - ANalog Circuit SYmbolic ANalysis Program*, User Guide, Library of Electrical Department, Politehnica University of Bucharest, Bucharest, 2010.
[11] W. Stutzman and G. Thiele, *Antenna Theory and Design*, New York: John Wiley and Sons, 1981.
[12] T. Health, "Beam Steering of Nonlinear Oscillator Arrays through Manipulation of Coupling Phases", IEEE Trans. Antennas and Propag., N0 52 (7), 2004, pp. 1833-1842.
[13] Oana Sîrbu, M. Iordache, L. Mandache, Lucia Dumitriu, „Novel Approach for Electromagnetic Acuators Analysis in Transient Behavior", Journal: Advances in Electrical and Computer Engineering Year: 2012, Vol: 12, Issue: 1, pp. 103-108, DOI: 10.4316/AECE.2012.01017.
[14] Iulia Dumitrescu, Smail Bachir, David Cordeau, Jean – Marie Paillot, Mihai Iordache, "Modeling an Characterization of Oscillator Circuits by Van der Pol Model Using Parameter Estimation", Journal of Circuits, Systems, and Computers (JCSC), ISSN; 0218 – 1266, Volume 21, No. 5 (August 2012), pp. 1587 – 1605.

About the authors

Prof. univ. dr. ing. Mihai IORDACHE
Politehnica" University of Bucharest, Romania

Received the M.S. and Ph.D. degrees in electrical engineering from the Politehnica University of Bucharest, Romania, in 1967 and 1977, respectively. He is a Full Professor in the Electrical Department, Politehnica University of Bucharest, where he is working in the areas of circuit analysis and simulation, and in the Electrical Engineering Fundamentals. He is Doctoral Advisor at the Politehnica University of Bucharest, and the author or coauthor of more than 180 journal papers and 25 books. He is also a reviewer of different Scientific Conferences in the Analysis and Simulation Circuits. He was the recipient of the 2000 Romanian Academy Award.