SYSTEM FOR CONVERTING HEAT ENERGY INTO MECHANICAL ENERGY

Lecturer Eng. **Constantin UNGUREANU** PhD, Eng. **Dumitru CERNUŞCĂ,**
Lecturer Eng. **Cristina PRODAN** PhD, Assoc. Prof. Eng. **Leon MANDICI** PhD

[1]Stefan cel Mare University of Suceava
Faculty of Electrical Engineering and Computer Science, Department of Electrotechnics

REZUMAT. Lucrarea prezintă studiul unui sistem de conversie a energiei termice în energie mecanică utilizând materiale cu memoria formei (MMF). Sistemul de conversie se referă la un motor termic care utilizează drept elemente propulsoare mai multe fire din Nitinol cu memoria formei utilizate pentru a obține o mişcare de rotație continuă. Sunt prezentate rezultatele experimentale preluate în urma funcționării motorului termic cu referire la valoarea cuplului şi viteza de rotație.

Cuvinte cheie: motor termic, Nitinol, rotor cu excentric.

ABSTRACT. This paper presents the study of a system for converting thermal energy into mechanical energy using shape memory materials (MMS). The conversion system refers to an heat engine which uses as a driving element more of Nitinol shape memory wires used to obtain a continuous rotary motion. Experimental results from the operation of the heat engine taken with respect to the torque and speed of rotation values are presented.

Keywords: heat motor, Nitinol, eccentric rotor.

1. INTRODUCTION

Advances in military technology and space microrobotics and microtechnologies have led to a new category of microengines and engines, known as "unconventional engines". Unlike electric engines, that are considered conventional and based exclusively on force developed in magnetic and electric field, the unconventional are made and based on other forces, already presented in scientific literature. In this category, an important place occupies the solar engine and actuators, which are the subject of the paper. Obviously, such an approach directions of research is related to the continuous growth of energy requirements, the conditions of existence on our planet of limited conventional energy resources. In this context, heliotehnics is becoming increasingly involved in finding solutions to current and future.

Solar energetics has stimulated some research, which led to the heat engines, designed specifically for this type of energy source such as Nitinol or thermobimetallic engines and presented as conventional systems for conversion of heat energy into mechanical energy.

At this stage, the Nitinol engines can not compete yet with conventional engines, but what will determine the development of such systems is rather the simplicity of design, easy maintenance, long life and safety.

2. CONSTRUCTION AND OPERATION PARTICULARITIES OF HEAT ENGINES WITH NITINOL

Implementation and testing of engines and actuators with Nitinol is an interesting research topic, providing in the next years, a vast field of activity for researchers. Interest in this research direction was favored, among other things, by the discovery of during the '30s, of the XXth century, of the shape memory material, to which are added the existence of potential energy sources, such as: solar energy, geothermal energy, ocean thermal energy etc., on which, turning them into mechanical work is a challenge. Patent literature [1, 2, 3, 4, 5, 7, 8, 9, 10, 11, 12, 14, 15], scientific papers, dissertation thesis [6, 17, 18] and PhD in Nitinol engines, shows a brief classification of these: rotating Nitinol engines (synchronized or unsynchronized) and linear Nitinol engines [15].

Nitinol engines are made up generally of two shaft constrained to rotate with the same angular velocity due to the presence of gearing, which synchronizes. These engines may have as actuating element, the Nitinol wires of a certain diameter or Nitinol in the form of

spring. The active element (NiTi) is subjected to repeated cycles of stretching and compression, done in terms of heating and cooling of certain portions of the spring or wire. As a result, is obtained a continuous movement, the motor being able to perform useful work. The interest for Nitinol engines is explained by constructive simplicity, relatively low cost, relatively easy maintenance to which is added the remarkable durability, reflected in the fact that after millions of revolutions, the active element wear is insignificant.

Among the potential applications of Nitinol engines is, first of all, the production of mechanical energy (and then electrical energy), using the water heated by solar energy, geothermal installations or of those based on the temperature gradient of the seas and oceans to which are added the ones who use hot water from industrial processes. Nitinol engine [22] presented below is classified as *unsynchronized*, to which pulleys move independently of each other, missing gear elements transmissions, necessary for synchronization.

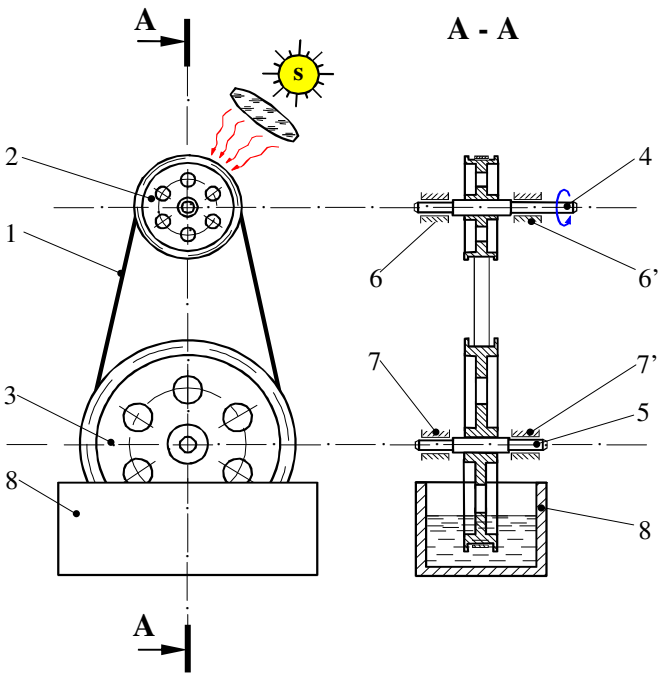

Fig. 1 Nitinol engine [13]:
1- Nitinol band; 2- driving wheel; 3- driven wheel; 4, 5- shafts; 6, 6', 7, 7'- sliding bearings; 8- cold source.

Nitinol engine (Figure 2), can be operated using a hot source constituted on the solar energy, geothermal energy, heat recovered from industrial processes based on the temperature gradient of the seas and oceans. In most cases, solar radiation is used, concentrated in the heated area with the help of solar concentrators, such as *Fresnel lens*. Analyzed engine is based on the transmission system, with intermediary traction elements (band transmission). In analyzed case, transmission element consists of a Nitinol band mounted on some wheels 2 and 3, the first of which is the *driving wheel* and the second is *driven wheel*. The two wheels are placed on two parallel shafts 4 and 5, supported in some bearings 6 and 6' and 7 and 7'. Heat sent to Nitinol band, through solar radiation, leading to its contraction and movement of the wheel 2, into direction of the arrow. Reversing heat source position in relation to the driving wheel, has the effect of reversing the direction of rotation. At the bottom of the analyzed transmission system, is placed a cold water tank 8, which are submerged, partially, driven wheel and the corresponding Nitinol band. Nitinol band cooling leads to a return to original form and to resumption of converter cycle, in a continuous motion of rotation, on the shaft driving wheel, in the direction of the arrow.

3. THE STRUCTURE OF THE PROPOSED HEAT ENGINE WITH NITINOL

The engine analyzed in this paper is based on Ridgway Banks patent obtained in 1975 and further developed in the Lawrence Berkeley Laboratory in California, USA.

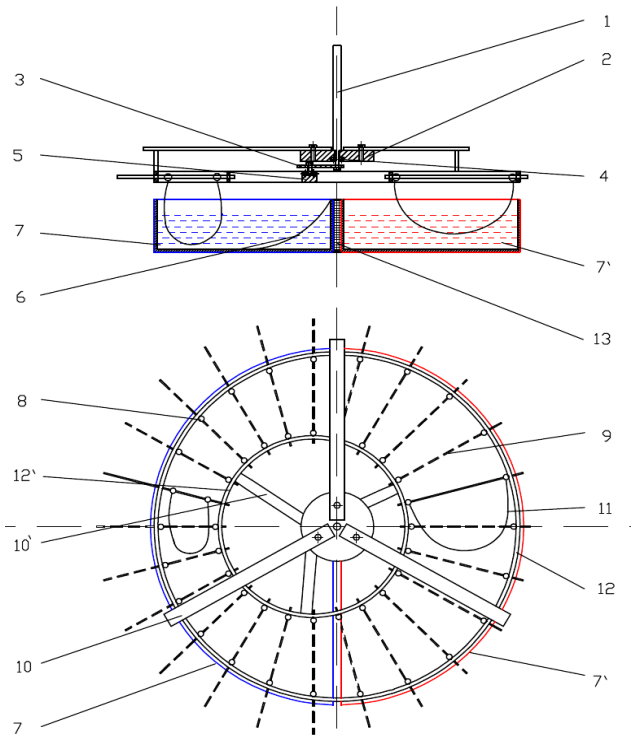

Fig. 2 Nitinol engine with eccentric rotor:
1- fixed central shaft; 2- the central part of the support; 3-eccentric piece; 4- friction bearing; 5- secondary eccentric element; 6-ramp; 7, 7′-water resevoir (the stator); 8- NiTi wires fasteners; 9-spokes; 10, 10′- support rods; 11-NiTi wire; 12, 12′-rings; 13-thermoinsulating material.

The structure of heat engine with Nitinol wires are presented in fig. 2.

For the construction of the engine are used as drive elements, 24 Nitinol wires with a diameter of 2 mm and a length of 240 mm. Nitinol transformation temperature is 65 ^{0}C and was memorized in the form of the letter U.

The engine (figure 2) has an eccentric rotor that consists of two rings, one of the base (12), with a diameter of 400 mm, and the other, arranged eccentrically (12'), with a diameter of 240 mm in which are disposed 24 elements (spokes) for guidance of NiTi wires. By fixed shaft (1) is attached the eccentric piece (3) in which rotates the element (5), together with the eccentric ring (12'), which, in its turn, is joined to the support bars (10').

The stator consists of two tanks, cold water (7) and hot water (7') having a diameter of 440 mm and a height of 100 mm. Between those two tanks, there is an insulating element (13) which is intended to prevent the heat transfer between them.

The rotor, being submerged in those two tanks, it tends to rotate due to the relaxation in hot water of NiTi wires, respectively, their contraction in cold water.

NiTi wires, from the hot water tank, tend to get into initial position and push the walls of the two rings with a certain force which is decomposed into a normal and tangential component, causing a continuous rotary motion. The rotor will record a rotary motion as long as there is a significant temperature difference between the two sources.

4. EXPERIMENTAL TEST BENCH

The engine was tested in two variants. In the first variant (Fig. 3), as the driving element, were used superelastic NiTi wires. Experimentally, it was found that, in this embodiment, due to the superelastic properties of NiTi, the engine can not develop a significant speed of rotation.

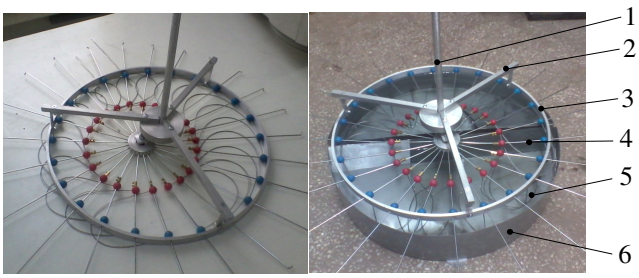

Fig. 3 Nitinol engine with eccentric rotor – first variant [19]: 1-fixed central shaft; 2- support bars; 3-the main ring; 4-guide elements; 5- NiTi wires; 6- cold and hot water tanks.

In the the second variant, was used NiTi with shape memory. The behavior of NiTi shape memory wires, was initially checked by successively immersing it in a container with hot water and then with cold water (fig. 4). It was observed that when the Nitinol wire is inserted in the hot water tank, it develops a enough force to set in motion the eccentric rotor.

Fig. 4 Experimental test bench for checking the behavior of Nitinol shape memory wire used in the rotor structure

The rotor was modified at the level of eccentric piece being replased with a smaller ring (Fig. 5) to reduce friction between the guides of Nitinol wires and holes in the two rings.

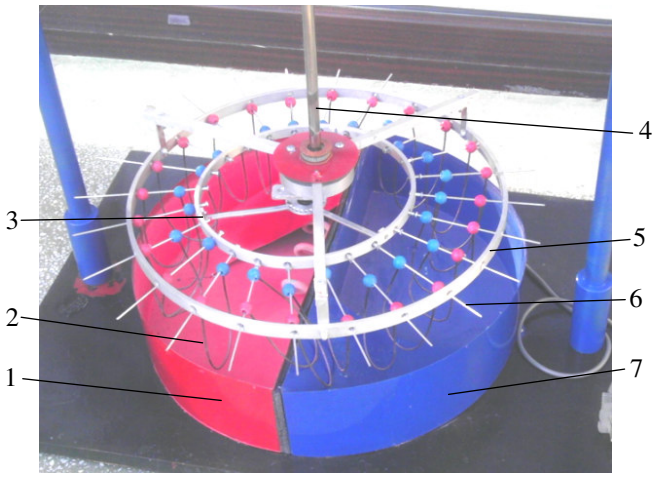

Fig. 5 Nitinol engine with eccentric rotor – second variant [19]: 1- hot water tanks; 2- Nitinol wire (2 mm diameter); 3- eccentrical ring; 4-fixed central shaft; 5- the main ring; 6-guide elements; 7- cold water tanks.

5. EXPERIMENTAL RESULTS

Experimental test bench in order to verify the operation of the engine is shown in fig. 6.

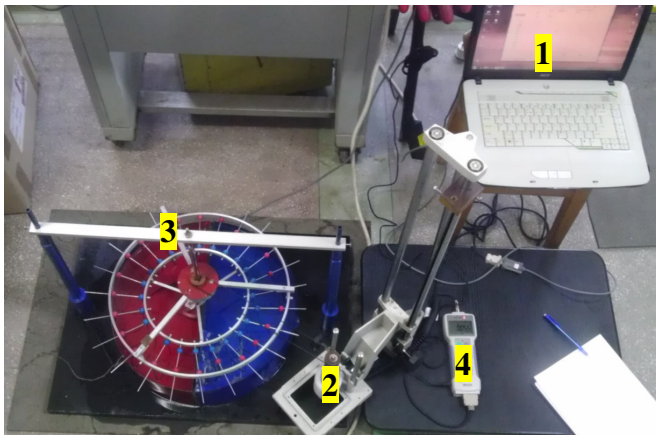

Fig. 6 Experimental test bench for speed of rotation and torque establishment [19]:
1-PC; 2-torque meter IMADA-ZLINK; 3- Nitinol engine;
4- the interface of the torque meter.

In the first phase of the experimental study was monitored engine speed according to the temperature of the two sources.

It was found that the maximum speed was obtained for a temperature of 90 ^{0}C hot water and cold water temperature of 23 ^{0}C. As the temperature difference between the two sources is reduced, the engine speed decreases (Fig. 7).

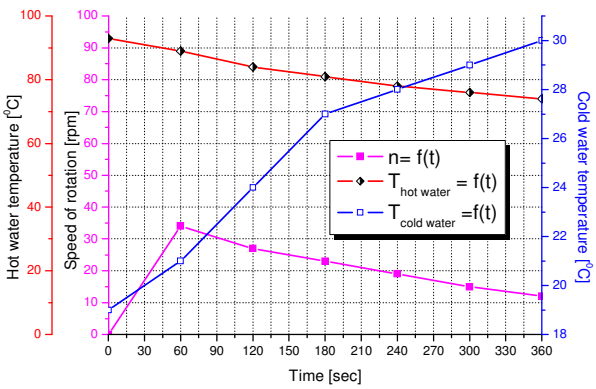

Fig. 7 NiTi engine speed variation when the temperature of the sources change

Determination of torque was achieved using a HTG2N digital torque meter that offers programmable high/low setpoints for go/no-go testing. The values can be displayed or transmitted using serial output and can be viewed and recorded via the GUI, shown in fig. 8. The HTG2N digital torque meter have a 0,001Nm resolution and can measure up to 2Nm.

As shown in fig. 6, the measuring device is connected to the rotor by means of a drive belt. In a first step, the determination of torque has been achieved by increasing temperature of hot source, to a period of 660 seconds, maintaining a constant temperature of about 25 ^{0}C for the cold water. Variation of torque in this situation can be seen in fig. 9.

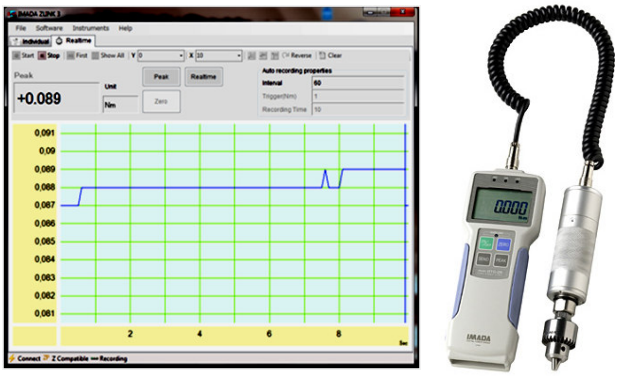

Fig. 8 GUI for the HTG2N digital torque meter

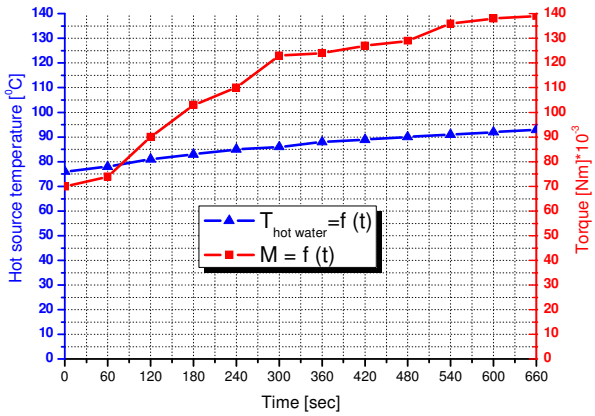

Fig. 9 NiTi engine torque variation with increasing temperature of the hot source

The evolution of the torque measured to the increase and decrease of the hot source temperature, to a time of 1680 seconds (the temperature of the cold water is about 25 ^{0}C) is presented in fig. 10.

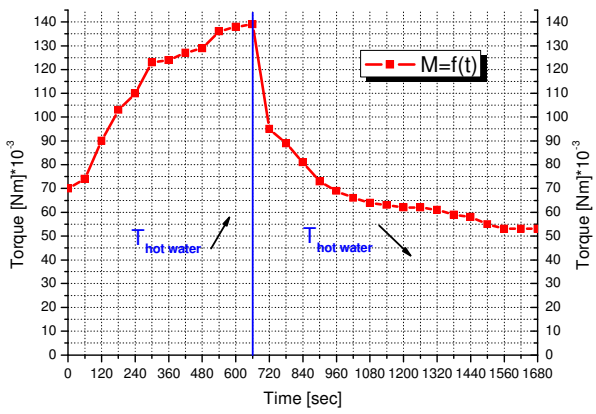

Fig. 10 Variation of torque with hot source temperature changes ($T_{cold\ water} \approx 25^0$C)

6. CONCLUSIONS

The purpose of this paper work was to present the design and analysis of an heat engine made using shape memory alloy (SMA), that are materials that "memorize" their shape at specific temperatures. At low temperatures, they are easy to deform, but at increased temperatures they exert large forces as they try to recover their original shape.

The first heat engine was built by Ridgway M. Banks in 1973. The engine turned 70 rpm and produced about half a watt of power. The Nitinol engine presented in this paper work is an improvement on the Bank's design. Because SMAs are highly resistive to corrosion, this kind of engines can find application in various environmental conditions. Nitinol heat engines can operate over a wide range of temperatures, by selecting a thermal memory material having a suitable critical temperature appropriate to the climatic conditions.

The analyzed heat engine are characterized by many advantages, among which can mention: constructive simplicity, quiet operation and without supervision, as long as certain conditions of operation is provided, however has the disadvantage of low torque and at the same time, the overall measure of a desired power level.

Nitinol engines preference are explained by several advantages materialized in low cost price and exploiting, handling and simple maintenance to which are added durability reflected in the fact that after millions of rotations, wear of the active element is insignificant.

Potential applications of Nitinol engine include, firstly, the production of mechanical energy (and then electricity), using water heated with solar installations, geothermal installations or those based on the temperature gradient of the seas and oceans, to which are added those that use hot water, resulting from industrial processes.

✓ The maximum value for speed of rotation (n = 34 rpm) was obtained for a hot water temperature of 90 ^{0}C and cold water temperature of 23 ^{0}C. As the temperature difference between the two sources is reduced, the engine speed decreases.

✓ The maximum torque value obtained for a difference of temperature between the two sources by 68 ^{0}C is 0,139 Nm and the power output of the Nitinol engine is approximately 0,49 W.

✓ Experimental tests have shown that to increase power output, the following changes could be made to the heat engine configuration: increase the number of wires; increase the wire diameter; increase the temperature of the hot source and decrease the temperature of the cold source etc.

BIBLIOGRAPHY

[1] BANKS, R. *Energy conversion system*. Int. Cl.^{2}: F01 B 29/00. Brevet US, 3913326. 1974-04-11.

[2] BANKS, R. *Linear output nitinol engine*. Int. Cl.^{4}: F03 G 7/06. Brevet US, 4563876. 1985-02-25.

[3] BAUMBICK, R. *Shape memory alloy actuator*. Brevet US, 6151897, 2000-11-28.

[4] CERRUTI, D. *Thermal actuation device*. Brevet IT, 6121588, 2000-09-19.

[5] CORY, S.J. *Variable density heat engine*. Int. Cl.^{2}: F03 G 7/06. Brevet US, 4027479. 1977-06-07.

[6] SCHILLER, E.H. *Heat engine driven by shape memory alloys: prototiping and design*. Blacksburg: Thesis submitted to the Faculty of Virginia Polytehnic Insitute and State University in partial fulfillment of the requirement for a degree of Master of Science in Mechanical Engineering, Virginia, S.U.A., 2002.

[7] HANAULT, C. *Heat motor*. Brevet FR, 5020325, 1991-06-04.

[8] JACOT, A.D. *Shape memory rotary actuator*. Brevet US, 6065934, 2000-05-23.

[9] JOHNSON, A.D. *Shape memory alloy rotary actuator*. Int. Cl.^{4}: F03 G. Brevet US, 4965545. 1990-00-11.

[10] JOHNSON, A.D. *Two-way shape memory alloy heat engine*. Int. Cl.^{3}: F03 G 7/06. Brevet US, 4490976. 1985-01-01.

[11] KUTLUCINAR, I.; SAUL, A.M. *Heat converter engine using a shape memory alloy*. Brevet US, 6226992, 2001-05-08.

[12] OTSUKA, G. *Shape memory alloy heat engine*. Brevet US, 5442914, 1995-08-22.

[13]SANDOVAL, D.J. *Thermal motor*. Int. Cl.^{2}: F03 G 7/06. Brevet US, 4010612. 1977-03-08

[14] SHIN, M.C. [et. al.] *Twin-crank type heat engine*. Int. Cl.^{4}: F01 B 29/10. Brevet US, 4683721. 1987-08-04.

[15] SWENSON, S.R. *Shape memory bi-directional rotary actuator*. Int. Cl.^{5}: F03 G 7/06. Brevet US, 5127228. 1992-07-07.

[16]UNGUREANU, C.; CERNOMAZU, D. *Motoare electrice solare de construcţie specială*. Suceava: Editura MATRIX ROM, Suceava, 2012.

[17] WAHLIG, M.A. [et. al.] *Nitinol engine development*. Solar Energy Program - Energy @ Environment Division, Lawrence Berkeley Laboratory, University of California, S.U.A., March, 1981, p.11-13.

[18] WAKJIRA, J.F. *The VT1 shape memory alloy heat engine design*. Blacksburg: Thesis submitted to the Faculty of the Virginia Polytechnic Institute and State University in partial fulfillment of the requirement for a degree of Master of Science Mechanical Engineering, Virginia, S.U.A.,2001.

[19] CERNUŞCĂ, D. *Analiza unui sistem de conversie a energiei termice în energie mecanică*. Proiect de diplomă. Universitatea „Ştefan cel Mare" din Suceava, Facultatea de Inginerie Electrică şi Ştiinţa Calculatoarelor, Suceava, 2013.

About the authors

Lecturer Eng. **Constantin UNGUREANU,** PhD
"Ştefan cel Mare" University of Suceava
email: costel@eed.usv.ro

He was born in Botosani, Romania, in 1976 and received the Engineering degree in Electrical Engineering from the Stefan cel Mare University of Suceava, in 2000. The PhD degree was received in 2011 also from the Stefan cel Mare University of Suceava. His main field of interest includes solar energy conversion, unconventional actuators and insulation systems. He is the holder of over 30 patents in the unconventional actuators domain.

Eng. **Dumitru CERNUŞCĂ,**
"Ştefan cel Mare" University of Suceava
email: cernusca_dumitru@yahoo.com

In 2013 he graduate the Stefan cel Mare University of Suceava, Faculty of Electrical Engineering and Computer Science. Currently he is in a first year of a master programme at Stefan cel Mare University of Suceava.

Lecturer Eng. **Cristina PRODAN**, PhD.
University „Stefan cel Mare" from Suceava.
email:cristinap@eed.usv.ro

Graduated at the University „Stefan cel Mare" Suceava. In 2008 she obtained PhD degree in electrical engineering field. Presently, Postdoctoral Researcher in the School of the University "Stefan cel Mare" Suceava, Electrical Engineering Department.

Assoc. Prof. Eng. **Leon MANDICI**, PhD.
"Stefan cel Mare" University of Suceava
email: lmandici@eed.usv.ro

Graduated at the Gheorghe Asachi Technical University of Iasi, Faculty of Electrotechnics. He received the Ph.D degree in electrical engineering from "Gheorghe Asachi" Technical University of Iasi, Romania, in 1998. He is an Associate Professor with the Electrical Engineering and Computer Science Faculty, University „Stefan cel Mare" from Suceava, Romania. His research topic is electrical and electromechanical drives systems.