SPEED CONTROL OF DC MOTOR USING FOUR-QUADRANT CHOPPER AND BIPOLAR CONTROL STRATEGY

Lecturer Eng. **Ciprian AFANASOV** PhD, Assoc. Prof. Eng. **Mihai RAȚĂ** PhD,
Assoc. Prof. Eng. **Leon MANDICI** PhD

Ştefan cel Mare University of Suceava
Faculty of Electrical Engineering and Computer Science, Department of Electrotechnics

REZUMAT. Lucrarea de faţă constă în studiul unui sistem de acţionare electrică pentru controlul vitezei motorului de curent continuu cu excitaţie separată utilizând un chopper cu comandă sincronă cu structura de tip punte H care asigură funcţionarea în patru cadrane a sistemului. Structura în punte H, cu dispozitive semiconductoare controlabile nu este utilizată în electronica de putere numai pentru realizarea convertoarelor c.c. – c.c. cu funcţionare în patru cadrane, această topologie fiind folosită de asemenea, pentru obţinerea invertoarelor, a redresoarelor PWM şi a filtrelor active monofazate. Pentru a putea fi studiată funcţionarea motorului de curent continuu în cele patru cadrane a fost construit întregul sistem de acţionare, acesta cuprinzând atât partea logică de comandă a tranzistoarelor de putere cât şi partea de forţă, convertorul realizat fiind bidirecţional şi reversibil Folosirea lui într-o aplicaţie este cerută de o sarcină care trebuie să funcţioneze, la rândul ei, tot în patru cadrane. Pentru cazul concret al unei acţionări electrice cu motor de c.c. aplicaţia impune rotirea acestuia în ambele sensuri cu posibilitatea frânării din orice direcţie şi recuperarea energiei de mişcare.

Cuvinte cheie: motor de curent continuu, chopper de patru cadrane, comanda sincronă, convertor in punte H.

ABSTRACT. This paper presents the study of a electric drive system for DC motor speed control, with separate excitation using a full bridge chopper type structure and bipolar control strategy which function in four quadrants of the system. H bridge structure with controllable semiconductor devices is not used only to achieve DC - Dc power electronics converters that function in four quadrants, this topology is also used to produce the inverter, the PWM rectifier and the single phase active filter. In order to be studied DC motor operation in the four quadrants was built entire drive system, it containing the logical control of power transistors as well as the force. Achieved converter is bidirectional and reversible. The use of converter in an application is requested by a task that must be operate, in its turn, also in four quadrants. For the specific case of a DC motor drives, application requires two-way of rotating in any direction and possibility to recover braking energy of motion.

Keywords: DC motor, four-quadrant chopper, synchronous control, H-bridge converter.

1. INTRODUCTION

The issue of power by static converters and power electronics circuits is a topic of particular interest in light of developments in the electronics industry and the modernization of equipment in the field. Operation circuits and electronic devices requires the power supply voltage source. Huge progress made by power electronics and microelectronics in recent years have demanded the creation of voltage sources with high reliability, good performance, lightweight and low volume.

Any DC machine needs to operateto be supplied with DC voltage. Typically this voltage has to be produced starting from the AC supply voltage.

DC machines usually are not satisfied with a voltage obtained by simple filtration and recovery, requiring a continuous variation of it. Continuous change of the supply voltage can be done by changing the AC voltage through autotransformers before rectifier or after rectifier AC voltage through static converters in commutation.

Modern devices that are equipped with power supply on the principle of PWM switching are known in the literature under the names of CHOPPER or SWITCH MODE POWER SUPPLY.

The chopper are controlled commutation converters, which use in the force thyristors provided with extinguishing auxiliary circuits or completely controlled devices. Control of these devices, both the entrance time and for blocking their conduction is achieved only at well-defined points in time, hence the name of controlled commutation converters.

The operating principle of their choppers-is: they transform a constant voltage in a pulse train, usually rectangular, whose duration and / or frequency can be changed by command, so the average voltage results, are adjustable .

These are assemblies that normally work at a frequency of 15-200kHz using a fast power transistor in the function of commutator. The transistor plays the role of a switch of the current absorbed from the rectifier connected to the network. Transistor leads only part of the operating cycle time at a specific frequency required. In this way, the consumer connection to the mains voltage, takes place in a limited time and therefore the current absorbed of the rectifier is discontinuous.

As used in electric traction, the chopper-s enable regenerative braking of DC machine. Because of this, using chopper-s is widespread.

Advantages of using chopper-s are:

- increased efficiency;
- flexibility in the command;
- low weight;
- small size;
- low time response.

2. FOUR-QUADRANT CHOPPER AND BIPOLAR CONTROL STRATEGY

The four-quadrant chopper is made of a four single-quadrant choppers connected H-bridge, and four antiparallel diodes connected also in H-bridge. Circuit configuration ensure current circulation from the source to the DC motor, and from the machine to the power supply in the case of the generator regime.

If we refer to the power $P_e = U_e * I_e$ (U_e- output voltage; I_e-output current) results that the equipment allows electricity circulating in both directions both through reversing the current $I_e$and by reversing the polarity of voltage U_e. In that way converter is bidirectional and reversible.

In figure 1 is represented full bridge chopper topology with IGBT transistor which includes two arms A and B. The arms are made of two IGB transistors, T1, T2 for arm A, and T3, T4 for arm B. Diodes D1 D2, D3 and D4 are mounted in antibaralel with each transistor.

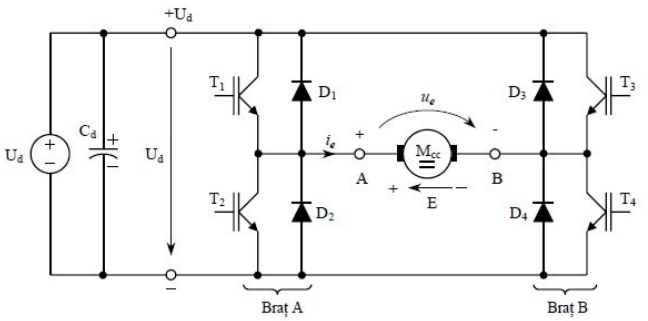

Fig. 1 Full bridge DC-DC converter with IGBT transistors

Power supply structure is made from a single source that provides continuous voltage *Ud* well filtered. Source must be as close to H bridge and also provides binding capacity *Cd* which in addition the role of the voltage filter has the important function to take the energy discharged from the field inductances of the load after each command to block transistors.

The median point of the two arms are noted with A and B. These are the output terminals of the H-bridge structure between that is conected the active load of the converter. The converter output voltage is shown as u_e, and the current with i_e.

Control of the transistors in each arm is made with a pair of complementary PWM width modulated signals. Dependent on how the commands are correlated, of the two arms A and B, may be put highlighted two strategies for controlling the H-bridge chopper:

- the PWM control with bipolar voltage switching
- the PWM control with unipolar voltage switching

The four transistors of chopper are controlled simultaneously in all four quadrants.

In the case of PWM control strategy with a bipolar voltage switching are controlled simultaneously, diagonally transistors from H-bridge: T1 with T4, respectively T2 with T3. So when will be ordered for opening pair (T1, T4) will be locked pair (T2, T3) and vice versa.

Therefore for the four power transistors are only needed two width modulated control signals: PWM1 for the pair (T1, T4) and PWM2 for the pair (T2, T3). In practice are used complementary PWM signals with dead time. Control strategy is simple and easy to implement reason which is widely used in practice, although it is less efficient.

For this command can be put into evidence four operating subcicli of H-bridge over a period of switching Tc. They are given by the four paths of output current i_e in a cycle of operation.

In figure 2 these paths are presented for PWM control strategy with a bipolar voltage switching.

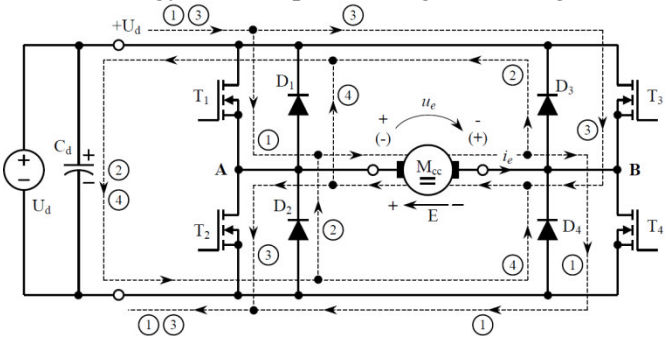

Fig. 2 Currents trails of the four-quadrant chopper and bipolar control strategy

Figure 3 shows the waveforms for a real case when taking into account the voltage drop in conduction devices. Waveform of voltage deviations u_e, from the ideal form submitted become more strident as the U_d voltage is low (of the order of volts or tens of volts). Since all four paths currents are present two semiconductor devices in conduction, transistor or diode, voltage drops occurs in the order of (2 to 6)V that may affect visible the waveform of the voltage u_e, as shown in Figure 3.

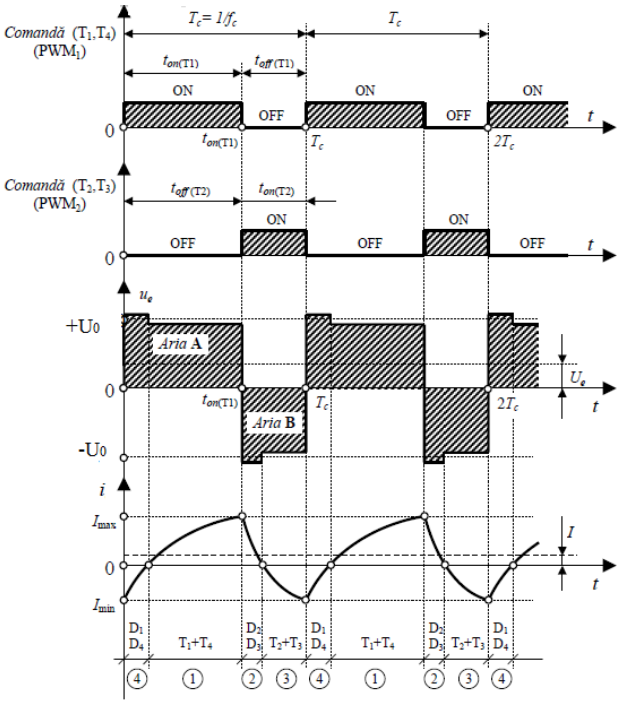

Fig. 3 The real waveforms corresponding to a full bridge chopper and PWM control strategy with a bipolar voltage switching

It is noted that during operation, at times $t_{on(T1)}$ and Tc, output voltage of H bridge converter suddenly changes its polarity issue that led to the designation of PWM control strategy with a bipolar voltage switching.

The advantages of using this type of chopper:

- In this type the command chopper is simpler because it simultaneously control all four transistor.
- Another advantage is that disappears the discontinued operating mode, therefore the characteristics are linear in all four quadrants.

Figure 4 shows the mechanical characteristics for a a full bridge chopper and PWM control strategy with a bipolar voltage switching

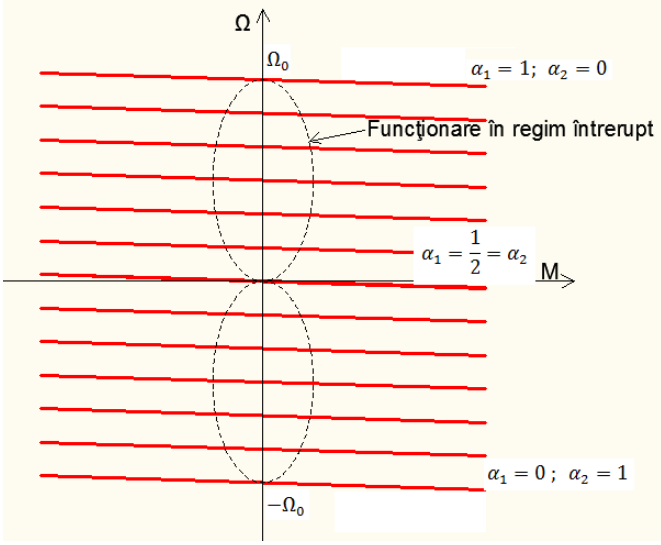

Fig. 4 Mechanical characteristics for a a full bridge chopper and PWM control strategy with a bipolar voltage switching

3. THE STRUCTURE OF CONTROL CIRCUIT FOR IGBT POWER TRANSISTORS

3.1. PWM GENERATOR REALISED WITH DISCRETE CIRCUITS

Triangular and rectangular voltage generator was made to the oscillator consists of two operational amplifiers LM741 under one integrator and one comparator with hysteresis (Fig. 5). Triangular voltage obtained in the first operational amplifier output will be applied to a comparator LM339 performing modulation in duration. In this way was made rectangular voltage generator to control the power transistor switch converter.

By changing the value of the potentiometer P1 shall be made the output pulse frequency changes and through the modifying the value of potentiometer P2 is impulse change as a positive duration.

The output voltage of this type of PWM signal generator is connected to the power switch transistor gate in four-quadrant chopper and bipolar control strategy.

Control of IGBT transistor is made with two signals AH, BL (T1, T4) and BH, AL (T2, T3)

For the electrical connection order to be performed between the signal generator and IGBT transistors was necessary to make a interface board that ensuring electronic link between the command and force.

In figure 5 and figure 6 is represented the control circuit scheme for PWM generator with a bipolar voltage switching strategy.

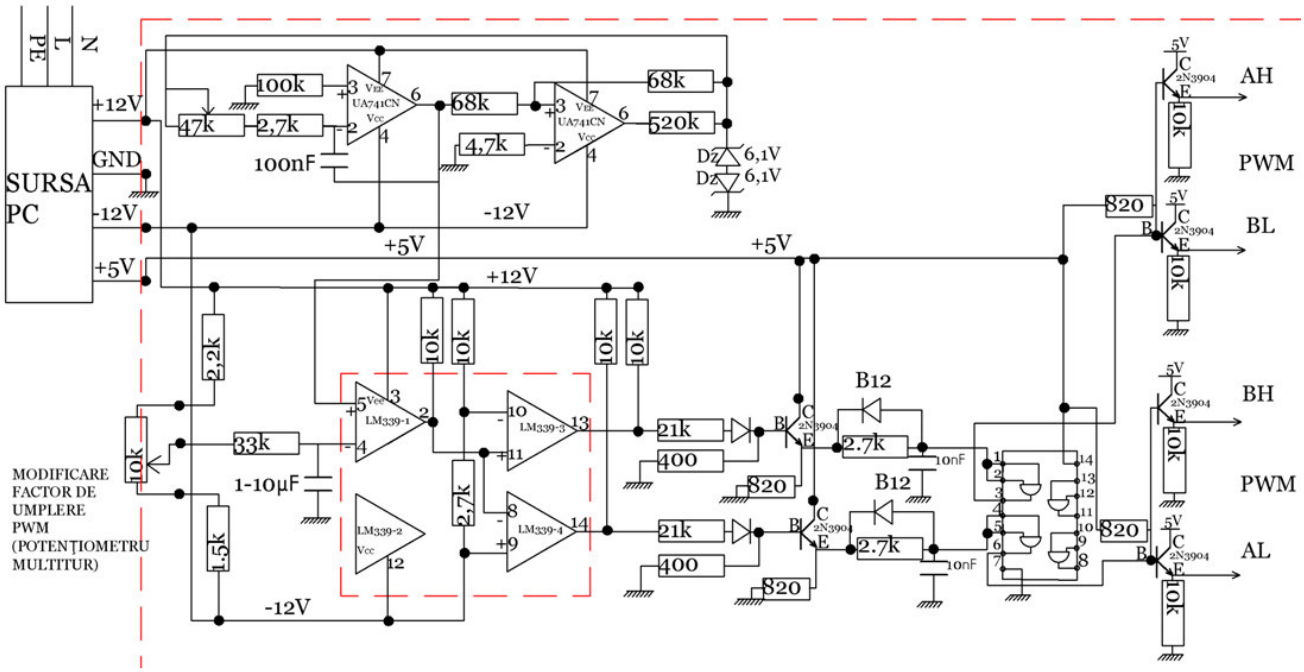

Fig. 5 Control circuit scheme for PWM generator with a bipolar voltage switching strategy

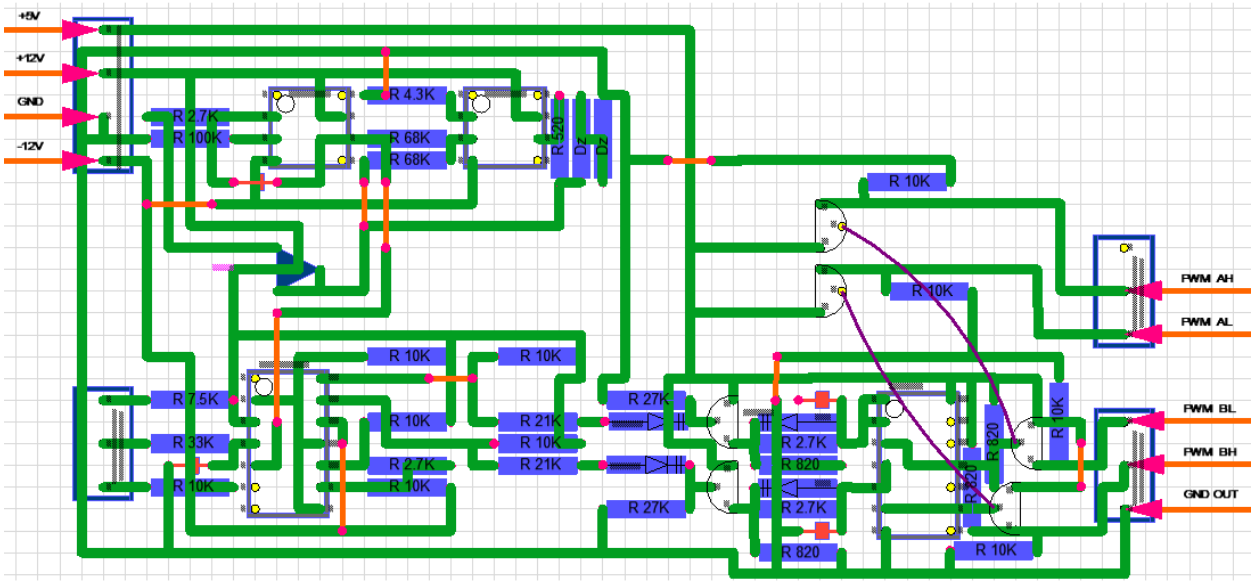

Fig. 6 Wiring of PWM signal generator

3.2. PWM signal adjustment circuit BOARD 2s SKYPER 32 PRO R

PWM control signals of power transistors, are sent to the two drivers by means of a interface plate that provides the following functions:

- PWM signals are galvanically isolated;
- enables the establishment control mode for different configurations of transistors IGBT inverter;
- raise the drivers IGBT control signals from 5V to 15V;
- report optically presence of the control voltage;
- report optically the state of IGBT drivers;
- provides link with power sources of different circuits;
- provides start and stop of ATX type switching sources used in the power circuits.

Galvanic isolation between control and force was made with performance optocouplers that have the ability to work at a frequency of several hundred kHz. Since the output of the optocoupler is low was designed

a circuit that raises to 15V signals, this value is necessary to the input PWM of IGBT drivers.

Due to the facilities offered by the family of modules SEMIX and from the desire to realize a high power chopper which shall be used in different configurations we have used for its construction, two IGBT modules of the range SEMIX2s, IGBT modules with the name SEMIX302GB126HDs.

The characteristics of this family lead to the realization of a compact inverter with low inductance. If it is shortened, and routes of connection wire on the continuous current so that they to have as little inductive character, resulting a reduction of spikes that occur in the process of switching of the IGBT transistors. Due to the direct connection of the PWM driver to the power module is obtained an optimal control of transistors and electrical noise and losses on connection wire and connectors are removed. Using the family modules SEMIX, entire design of the inverter is simplified significantly.

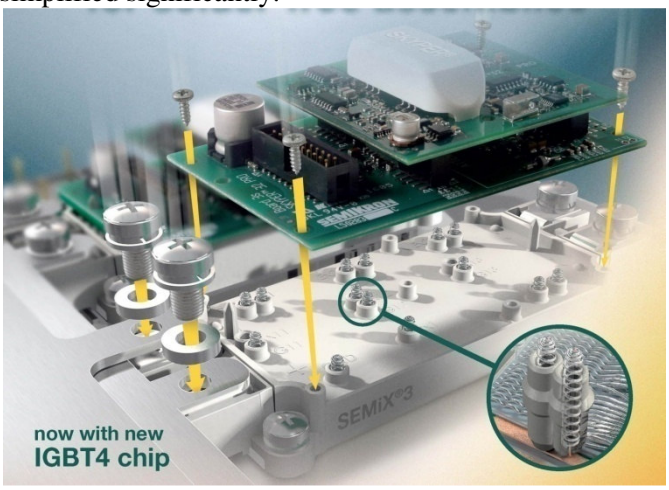

Fig. 7 IGBT modules from the family SEMIX

To control the two IGBT modules SEMIX302GB126HDs type, we chose an IGBT Driver offered by the company SEMIKRON. Driver's name is SKYPER 32 PRO R, an it is professional version and top of the range of the drivers for IGBT modules type chosen.

Selected driver is used to control two IGBT transistors connected in half bridge. The control functions, galvanic separation and protection are integrated into driver.

3.3. Power circuit of full bridge four-quadrant chopper.

The power circuit is composed from an constant voltage source and a four IGBT transistors connected in full bridge. Voltage source is made of a single-phase bridge rectifier and two 4700μF capacitors (450V) series. We used two capacitors connected in series in order to be created an artificial neutral point. The connection to the neutral is necessary for some control strategies of the DC motor.

The four-quadrant chopper is realized by using two arms of semiconductor elements in modular form. Each arm includes two high power IGBT transistors which in turn are connected in antiparallel with a diode. Nominal current the IGBT transistor is 200A in the case of long-term use regime, and a maximum current of 300A for a time of 10 seconds. Nominal voltage of transistors is 1200V. Same voltage and current values are also valid for diode.

4. EXPERIMENTAL RESULTS

Experimental test bench in order to verify the operation of the full bridge chopper and PWM control strategy with a bipolar voltage switching is shown in fig. 8.

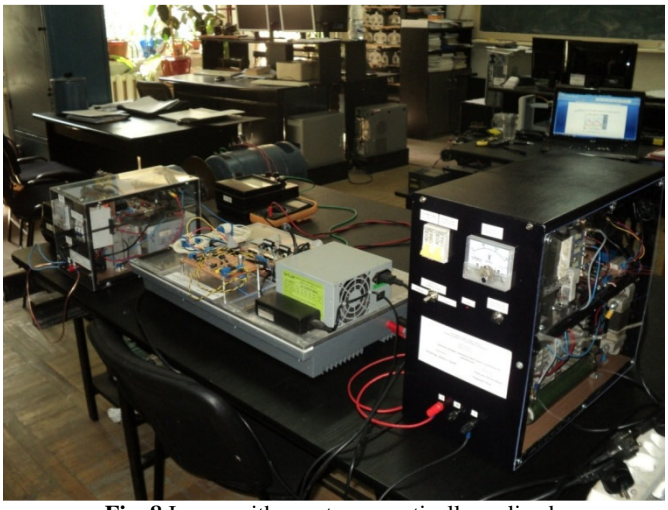

Fig. 8 Image with montage practically realized

In figures below are presented waveforms for voltages and currents taken from the full bridge chopper at different values of the filling factor.

In figure 9 and figure 10 is represented with yellow color the reference voltage in the form of a triangular signal on pin 6 of operational amplifier UA741. This signal is designed to establish the frequency of PWM control signal. From the probe 3 of oscilloscope was taken voltage command signal, signal that is designed to determine the value the filling factor of the PWM signal. Through comparison of the two signals described above we obtain the control signal of the IGBT transistor, signal that can be seen on channel 2 of the oscilloscope.

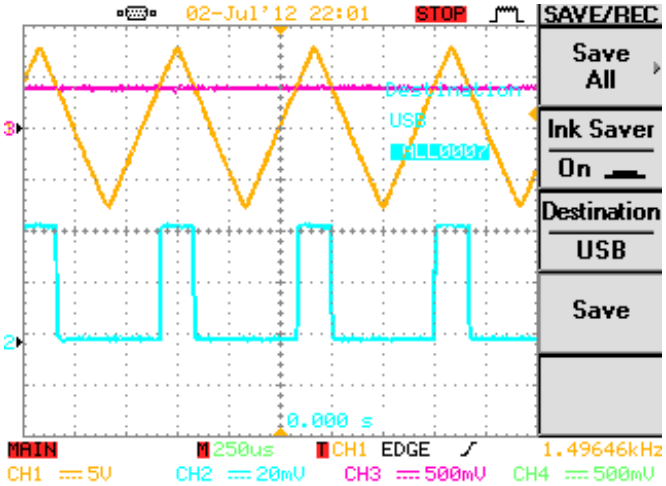

Fig. 9 Small filling factor of PWM signal

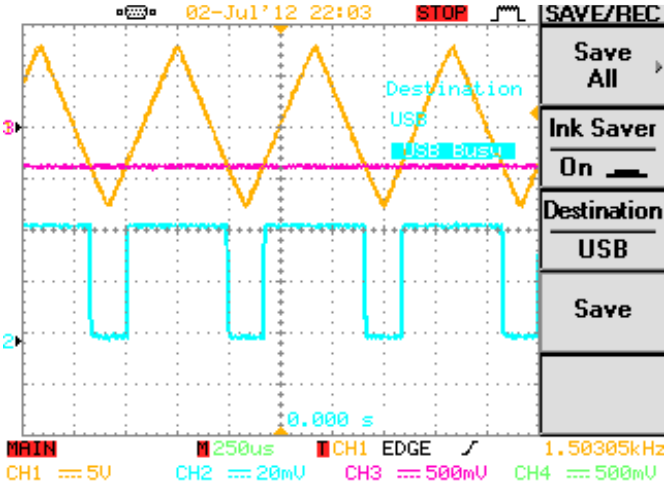

Fig. 10 High filling factor of PWM signal

In the case of figure 11, is represented the control voltage taken from terminal 13 and 14 of the integrated circuit LM339. It is noted that the dead time of the the control voltage of the first pair of transistors (T1, T3) and the entrance to the conduction of the second pair of transistors (T2, T4) is 0.

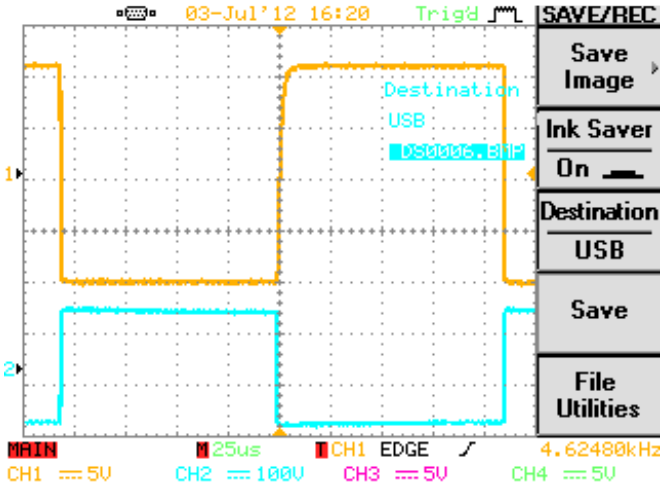

Fig. 11 Control signals without dead time

After the implementation of the dead time, with a circuit consisting of an RC group and a signal inverter, we have obtained a guard time of 14 µs. In figure 12 is represented the PWM signals with 14µs dead time.

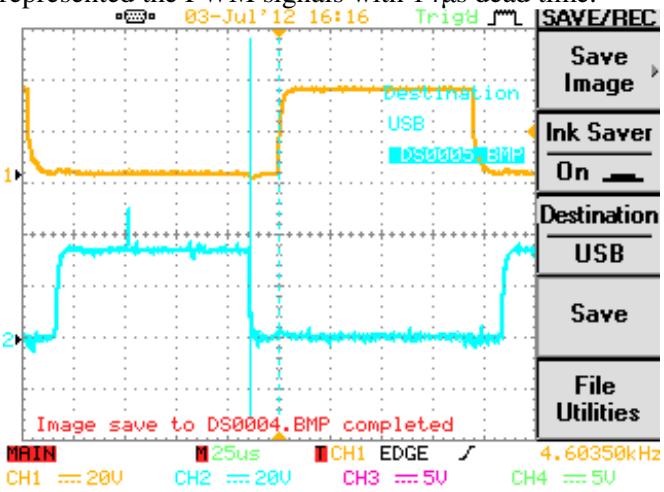

Fig. 12 PWM signals with dead time.

In figure 13 and 14 is represented with yellow color the motor speed, with blue the voltage at the motor terminals, with purple current through the motor and with green the current drawn from the source.

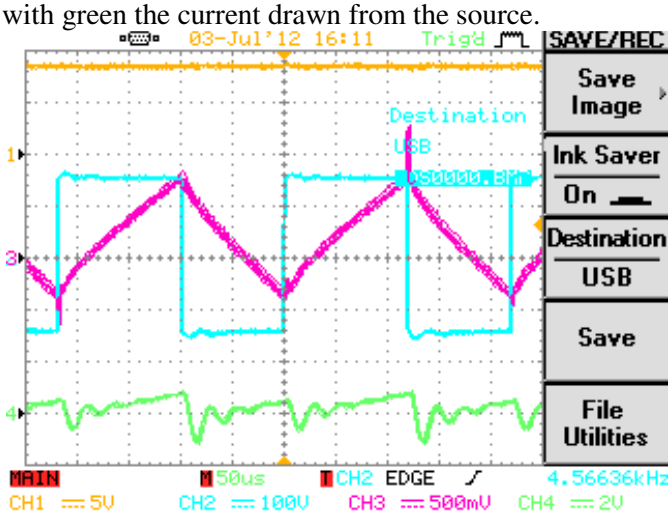

Fig. 13 Power signals of the chopper when speed is positive.

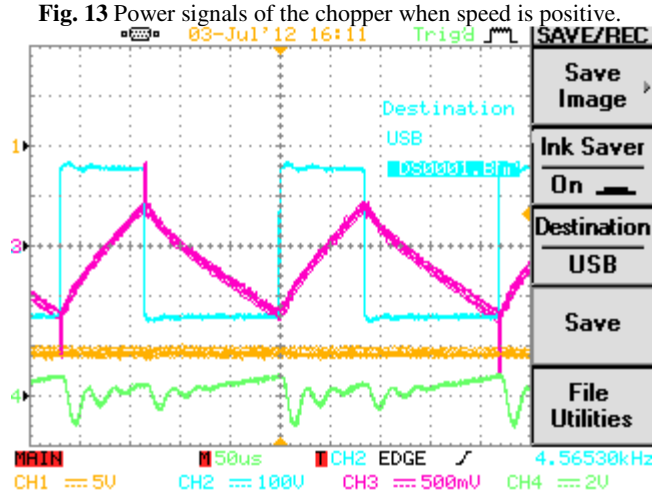

Fig. 14 Power signals of the chopper when speed is negative.

First figure is obtained when operating the machine in quadrants I and II, where speed is positive, ans second when we operating the machine in quadrants III and IV.

5. CONCLUSIONS

After the experimental determinations the following conclusions to be drawn:

- the control circuit provides with success the transition of the machine in another quadrant from the motor regime to generator regime;
- for this type of chopper command is simple;
- intermittent operation mode disappears, therefore the characteristics are linear in all four quadrants;
- the use of converter in an application is requested by a task that must be operate, in its turn, also in four quadrants.

BIBLIOGRAPHY

[1] S. Muşuroi, D. Popovici, *Acţionări electrice cu servomotoare*. Timişoara: Editura Politehnică, 2006.
[2] National Semiconductor, *Op Amp Circuit Collection*, Application Note 31, September 2002.
[3] http://www.SEMIKRON.com
[4] *Trench IGBT Modules SEMiX302GB126HDs*, Rev. 27 – 02.12.2008 © by SEMIKRON.
[5] *Application Manual Power Modules*, SEMIKRON International.
[6] M. HERMWILLE, *Plug and Play IGBT Driver Cores for Converters*, Power Electronics Europe Issue 2, pp. 10-12, 2006.
[7] *SEMiX® IGBT modules for fast, solder-free assemblies*, SEMIKRON INTERNATIONAL GmbH, Nürnberg, Deutschland.

About the authors

Lecturer Eng. **Ciprian AFANASOV,** PhD
"Ştefan cel Mare" University of Suceava
email: aciprian@eed.usv.ro

He was born in Suceava, Romania, in 1983 and received the Engineering degree in Electrical Engineering from the Stefan cel Mare University of Suceava, in 2007. The PhD degree was received in 2010 from the „Gheorghe Asachi" Technical University of Iasi. His main field of interest includes electrical drives and power electronics.

Assoc. Prof. Eng. **Mihai RAŢĂ**, PhD
Stefan cel Mare University of Suceava
email: mihair@eed.usv.ro

Graduated at the "Gheorghe Asachi" Technical University of Iasi, Electrotechnical Faculty. After finishing of the university he started to work at the Stefan cel Mare University of Suceava, Electrical Engineering Faculty, Electrotechnical Department. His research topics are power electronics, digital control of electrical drives, vibromotors and applications of PLC.

Assoc. Prof. Eng. **Leon MANDICI**, PhD.
"Stefan cel Mare" University of Suceava
email: lmandici@eed.usv.ro

Graduated at the Gheorghe Asachi Technical University of Iasi, Faculty of Electrotechnics. He received the Ph.D degree in electrical engineering from "Gheorghe Asachi" Technical University of Iasi, Romania, in 1998. He is an Associate Professor with the Electrical Engineering and Computer Science Faculty, University „Stefan cel Mare" from Suceava, Romania. His research topic is electrical and electromechanical drives systems.