EXPERIMENTAL ANALYSIS ON EXTERNAL SURFACE CONVECTIVE-RADIATIVE HEAT TRANSFER IN STATIONARY DIESEL ENGINES

Veneția SANDU, Virgil-Barbu UNGUREANU, Mircea IVĂNOIU, Liviu COSTIUC

"TRANSILVANIA" UNIVERSITY OF BRAȘOV,
DEPARTMENT OF MECHANICAL ENGINEERING, BRAȘOV, ROMANIA

Abstract. The present paper pursued a more accurate equation of convection and radiation heat loss released to the environment through the outer surfaces, by means of energy balance applied to internal combustion engine. The heat transfer coefficient is calculated using energy balance performed in steady operation modes, with tests performed on an instrumented dynamometric engine bench. For this particular application there were considered several distinct heat transfer conditions in external flow – free convection and forced laminar convection – being investigated semi-empirical equations of the same kind, suggested in literature. The validation of external surface temperatures was done using Infra Red thermography.
Keywords: heat transfer, convection-radiation, energy balance, heat engine, IR thermovision.

1. INTRODUCTION

The internal combustion engine is an open thermodynamic system to which they can be applied the mass and energy conservation principles. The study of engine balance terms can improve engine efficiency by means of reducing energy losses. The energy conservation can be written according to equation (1), on a control volume surrounding the engine, in a steady state operation, reported on unit time:

$$\dot{Q} = \dot{Q}_e + \dot{Q}_c + \dot{Q}_{exh} + \dot{Q}_{in} + \dot{Q}_{un} \text{ [kW]}. \quad (1)$$

The fuel chemical energy $\dot{Q}$ turns into effective work $\dot{Q}_e$ (or engine brake power), heat loss in cooling fluids (coolant and oil) $\dot{Q}_c$, heat loss in exhaust gas $\dot{Q}_{exh}$, incomplete combustion loss $\dot{Q}_{in}$ and unaccounted heat loss, $\dot{Q}_{un}$.

The last term is an undetermined one, which typically considers other miscellaneous heat losses that were not included in equation (1), so it can be found by subtraction. The major contribution to $\dot{Q}_{un}$ is the convection and radiation heat loss $\dot{Q}_{conv-rad}$ of the engine in the environment through its external surfaces [1, 2, 3].

The literature data about convection and radiation heat loss through engine surfaces is scarce, so the present paper intends to investigate different heat transfer models and to validate them by experiments.

The paper also responds to an academic need which is the updating of a laboratory work in Thermodynamics entitled "Energy balance applied to internal combustion engine" [4]. The energy balance calculation includes a semi–empirical formula for evaluation of $\dot{Q}_{conv-rad}$ in function of mean outer surface temperature, t_{ms}:

$$\alpha_{conv-rad} = 1.16 \cdot \left(4.9 + 5.6 \cdot 10^{-4} \cdot t_{ms}\right), \quad (2)$$

with $\alpha_{conv-rad}$ – overall heat transfer coefficient through convection and radiation [W/(m^{2}K)].

As during experiments the variation of t_{ms} was limited in the range $55 - 66°C$, the small variations of α generated almost constant values of $\dot{Q}_{conv-rad}$ showing that formula (2) is not sensitive.

The purpose of the work is to find more accurate values for heat transfer coefficient, taking into account the specificity of heat transfer, to find a more sensitive formula than equation (2) and to investigate which type of heat transfer suits best to experimental values.

2. TESTING PROCEDURE

2.1. Experimental test bench

The energy balance measurements were performed at "Transilvania" University of Brasov - Romania, Department of Mechanical Engineering, on a dynamometric test bench fitted with a naturally aspirated diesel engine manufactured for industrial applications whose main characteristics are described in Table 1.

Table 1

Engine parameters

Bore × Stroke [mm]	108 × 130
Cylinder configuration	2 in line, vertical
Total displacement [l]	2.83
Compression ratio	17 : 1

D30 engine is a four stroke diesel engine, having rated power of 20 kW at 1800 rpm.

The hydraulic brake measures the friction of a body within a liquid when it is driven by the tested engine.

During tests, the ambient conditions were the following ones: barometric pressure 718 mm column Hg, average air temperature 16ºC.

The dynamometric test bench was fitted with all the instruments and sensors required for the measurement of engine performance, according to engine testing standard [5]: inductive tachometer for engine speed, diaphragm flowmeter for engine intake air, fuel consumption indicator, thermocouples for temperatures of air at the inlet and outlet of engine radiator, ambient temperature, exhaust gas temperature, local temperature of engine surface.

2.2. Air velocity measurement

The stationary diesel engine is placed in a large laboratory room with total volume of 500 m^3 which admits the hypothesis of operation in open space so the heated surface of the engine may transmit heat freely without any impediment or enclosure.

The air surrounding the engine has a particular motion due to fan operation so the air at the exit of the heat exchanger flows over the engine surfaces. The fan is mounted directly on the crankshaft so the fan speed is the same with engine speed.

An increase in engine speed will raise the air velocity in external flow on engine surface. The air velocity distribution around the engine was evaluated in five points represented in Figure 1.

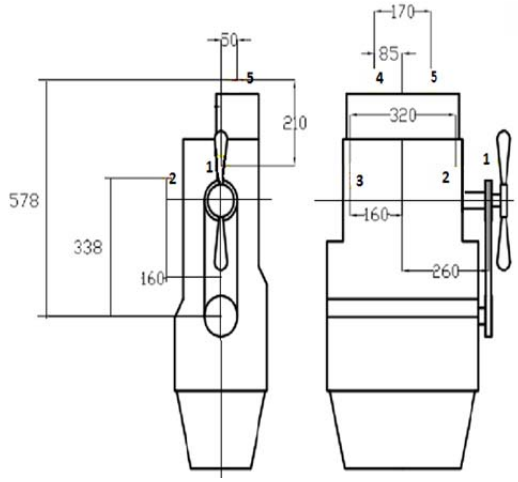

Fig. 1. Positions of measurement points around the engine.

The air velocity tangential to the engine surface can be measured using a Pitôt tube and a micromanometer, according to equation (3). The tube measures the dynamic pressure of air, p_d, by subtraction from total pressure, p_t, the static pressure, p_s. The difference can be visualized with a micromanometer by reading the head of alcohol column.

$$p_d = \frac{\rho w^2}{2} = p_t - p_s \,. \qquad (3)$$

2.3. IR temperature measurements

The evolution of infrared thermography in convective heat transfer was reported in [6] being emphasized the main advantages: non-intrusive, very sensitive, short response time (around 20 μs). The surface visualisation allows optimizations both in steady and transient measurements, some applications close to engine use being those of an automotive heat exchanger [7] and of a containerised engine driven cogeneration set [8]. For current work a Fluke Ti 20 "Thermal imager" system was used, being able to capture thermal images and to process them with own Fluke InsideIR software, version 3.11 [9].

One function of the Inside IR software is the calculation of mean values of temperatures for selected surfaces from a given thermal image, being of paramount importance in this work.

The engine surface temperature was measured both locally with thermocouple placed on different points on the engine surface (crankcase, oil sump, cylinder head) and superficially using the IR camera.

3. EXPERIMENTAL METHOD

There were made measurements for three steady operation modes of the engine whose main parameters are presented in Table 2.

Table 2

Parameters of engine operation modes

Operation mode	I	II	III
Speed [rpm]	1246	1596	1354
Brake torque [Nm]	73.6	122.6	132.5
Fuel consumption [g/s]	0.603	1.332	1.384
Volumetric intake air flow rate [m^3/h]	104	116	108
Ambient temperature, t_a [°C]	16.0	16.0	16.0
Exhaust gas temperature [°C]	216	304	301
Air temperature at outlet from cooler [°C]	50	66	60
Engine temperature (thermocouple) [°C]	60	62	64

The engine surface temperatures were measured with thermal images for each mode, a set being presented in Fig. 2.

The bottom view could not be directly measured and was considered similar to upper view, being measured with thermocouples.

The engine mean temperature was calculated by weighting of mean temperatures from engine views, as presented in Table 3.

Table 3

IR engine mean temperatures

Mean temperature [°C]	I	II	III
Right view	59.7	64.3	68.4
Left view	71.9	79.0	81.3
Upper (bottom) view	42.8	54.7	60.0
Front view	59.2	61.5	63.2
End view	60.6	63.2	69.9
Overall mean temperature	60.9	66.4	69.5

By comparing engine temperatures measures from Table 2 and 3, it can be noticed that thermocouple measurements are lower than IR ones.

At engine speeds from modes I, II, III there were measured tangential air velocities around the engine, in the points indicated in Fig.1, the values of air velocities being presented in Table 4. The velocities are useful for characterising the flow according to Reynolds number.

Table 4

Air flow velocities [m/s]

Point/ Mode	I	II	III
1	6.9	12.8	8.7
2	6.1	12.0	8.1
3	3.5	4.0	3.7
4	5.0	5.9	5.8
5	5.8	6	5.9

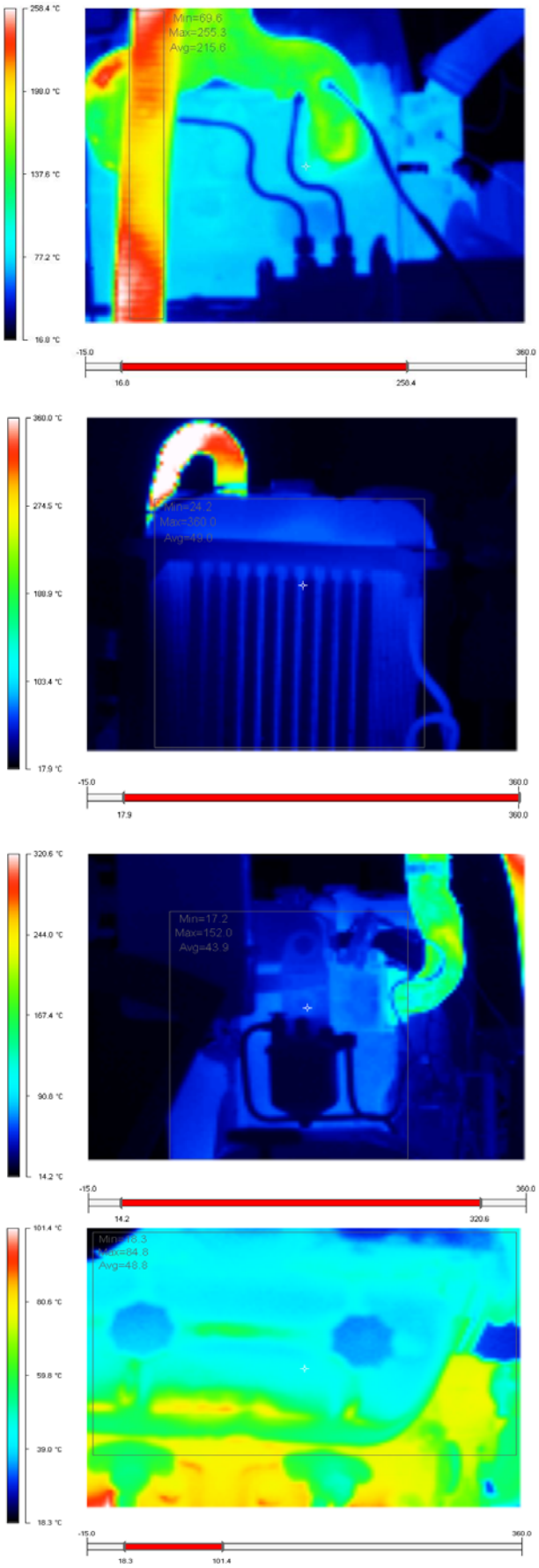

Fig. 2. IR images of engine sides.

4. DATA PROCESSING

Starting from experimental data of the engine heat balance and assuming that $\dot{Q}_{un}$ is approximately equal to $\dot{Q}_{conv-rad}$, the latter can be calculated by subtraction from equation (1), which can be written as follows:

$$\dot{Q}_{conv-rad} = \dot{Q} - (\dot{Q}_e + \dot{Q}_c + \dot{Q}_{exh} + \dot{Q}_{in}) . \quad (4)$$

By applying conventional formulas for balance terms as exposed in [4] there were calculated values of heat transfer coefficients based on Newton's law. The engine overall surface A was calculated by planimetry being 1.35 m^2.

The heat transfer coefficient $\alpha_{conv-rad}$ was calculated with formula:

$$\alpha_{conv-rad} = \frac{\dot{Q}_{conv-rad}}{A \cdot (t_{ms} - t_a)} = \frac{\dot{Q}_{conv-rad}}{A \cdot \Delta t} . \quad (5)$$

The separation of convection from overall heat transfer (convection and radiation) can be performed by subtraction:

$$\alpha_{conv} = \alpha_{conv-rad} - \alpha_{rad} , \quad (6)$$

with α_{rad} – equivalent coefficient of radiative heat transfer.

$$\alpha_{rad} = \frac{e \cdot C_0}{t_{ms} - t_a} \cdot \left[\left(\frac{T_{ms}}{100} \right)^4 - \left(\frac{T_a}{100} \right)^4 \right], \quad (7)$$

with e – emissivity coefficient of engine surface (0.784 for cast iron) and $C_0 = 5.67\,\mathrm{W}/\left(\mathrm{m^2K^4}\right)$ - black body radiation coefficient.

In order to analyze actual heat transfer according to different models, there were considered the following distinct situations:

4.1. Free convection in external flow

In this case the engine is considered to have no influence of air flow from fan, so the air motion is produced only by its density variation along the hot engine surface.

The formalism is given by relation between Nusselt number, Nu, and Rayleigh number, Ra:

$$\mathrm{Nu} = C \cdot (\mathrm{Ra})^n . \quad (8)$$

Typical values for constants C and n [10], recommended for Rayleigh numbers 10^7 to 10^{12} for cylindrical bodies are C = 0.125 and n = 1/3. The calculations considered the air properties (Prandtl number Pr, thermal conductivity λ and kinematic viscosity ν), at temperature of the thermal boundary layer or film temperature, t_f:

$$t_f = \frac{t_{ms} + t_a}{2} . \quad (9)$$

By reducing the parallelepiped structure of the engine to the equivalent cylinder with the same area A, the equation (8) can be applied, keeping the value of exponent n as recommended in [10] and admitting dispersion of C around median value 0.4:

$$\mathrm{Nu} = (0.4 \pm 0.1) \cdot \mathrm{Ra}^{1/3} . \quad (10)$$

4.2. Forced convection in external flow

In this case is considered the influence of air motion actuated by engine fan by means of Reynolds numbers, the air flow being oriented horizontally from right to left in Figure 1. The convection can be considered dominant comparing to air density variation. The characteristic dimension of the flow was the engine length $L = 0.35\,\mathrm{m}$. The calculation of Reynolds numbers corresponding to maximum values of air velocities from Table 4 resulted values in the range $(1.4 - 2.6) \cdot 10^5$, smaller than the limit of turbulent flow $5 \cdot 10^5$, thus indicating that the air flow around the engine in boundary layer is laminar [10]. For laminar convection in external flow the convection coefficient varies along the surface so the formalism of heat transfer is averaged, resulting in the general equation:

$$\overline{\mathrm{Nu}}_\mathrm{L} = C \cdot \mathrm{Re}_L{}^m \cdot \mathrm{Pr}^n . \quad (11)$$

For flat plates and Pr numbers higher than 0.6, which is the case for air, the equation (11) becomes [11, 12]:

$$\overline{\mathrm{Nu}}_\mathrm{L} = 0.664 \cdot \mathrm{Re}_L{}^{1/2} \cdot \mathrm{Pr}^{1/3} \quad (12)$$

The calculations were in this case reversed, starting from equation (12) and finding out convection coefficient, in the hypothesis that the engine surface is a sum of flat plates and the air flow has the maximum value corresponding to point 1. The values are summarized in Table 5.

The comparison of heat transfer coefficients from first and last row of Table 5 shows similar results for experiments and calculations, the mean value being at the limit of free to laminar convection at low speeds for air.

The prediction of heat transfer coefficients of other engine operation modes can be done taking into consideration both the influence of differences

of temperature Δt and air velocities, w. As the two parameters are not totally independent, it is assumed that there is a dependency on their product $\Delta t \cdot w$, thus leading to equation:

$$\alpha_{conv-rad} = A \cdot \Delta t + B \cdot w + C \cdot \Delta t \cdot w \qquad (13)$$

Table 5

Heat transfer coefficients

Operation mode	I	II	III
$\alpha_{conv-rad}$ [W/(m^{2}K)], experimental, eq. (5)	16.55	27.56	25.06
α_{rad} [W/(m^{2}K)], eq. (8)	5.83	6.21	6.22
α_{conv} [W/(m^{2}K)], eq. (7)	10.72	21.35	18.84
$\alpha_{conv-rad}$ [W/(m^{2}K)], eq. (10)	16.39	16.92	17.20
$\alpha_{conv-rad}$ [W/(m^{2}K)], eq. (12)	17.26	23.48	19.36

In order to find out the unknowns (variables) *A, B* and *C* a linear system with three equations was formed, each equation being equalized with $\alpha_{conv-rad}$ resulted from equation (12), for cases I, II and III (Table 5). By applying the Cramer rule for solving linear systems which have as coefficients Δt, w, $\Delta t \cdot w$, it yielded the values of unknowns *A, B* and *C*. The units of *A, B, C* were kept in SI. The following equation replaces equation (2), being valid for this particular application:

$$\alpha_{conv-rad} = 0.21 \cdot \Delta t + 2.19 \cdot w - 0.0234 \cdot \Delta t \cdot w \qquad (14)$$

5. CONCLUSIONS

The following conclusions can be drawn:

1. The use of IR images proved an accurate method to evaluate engine surface temperatures.

2. The shear of radiation from overall heat transfer coefficient is 0.2-0.35, due to relatively low mean surface temperatures.

3. The free convection equation is in a certain extent close to experiments, the exponent *n* being confirmed by calculation. The recommended $C = 0.125$ [12] is too low, the appropriate *C* being 0.4.

4. The fan significantly influenced the engine heat transfer towards the environment, the measured air velocities showing the change from free convection to forced convection in laminar external flow.

5. The experimental data suited best to laminar convection (12) applied for flat plates, the resulted mean experimental value being 23.05 and calculated 20.03 W/(m^{2}K).

Acknowledgement

The authors would like to thank to Master students Romain Fernique and Andrei Brătescu for their assistance.

REFERENCES

[1] Heywood J.B., *Internal combustion engine fundamentals.* Mc-Graw Hill, New York (1988).

[2] Martyr A.J., Plint M.A., *Engine testing: theory and practice.* Butterworth Heinmann, London, (2007).

[3] Abedin M.J., Masjuki H.H., Kalam M.A.,Sanjid A., Ashrafur Rahman S.M., Masum B.M., *Energy balance of internal combustion engines using alternative fuels,* Renew. Sust. Energ. Rev., **26**, 20-33 (2013).

[4] Ungureanu V.B., Băcanu G., Şova D., Sandu V., Costiuc L. *Termodinamica. Aplicaţii practice. / Thermodynamics. Practical works*. Editura Universităţii Transilvania, Braşov (2004).

[5] ***STAS 6635-87: *Internal combustion engines for motor vehicles. Rules and methods for bench testing, http://www.asro.ro.*

[6] Carlomagno G.M., Cardone G., *Infrared termography for convective heat transfer measurements.* Exp. Fluids, **49**, 1187-1218 (2010).

[7] Bougeard D., *Infrared thermography investigation of local heat transfer in a plate fin and two-tube rows assembly,* Int. J. Heat Fluid Flow., **28**, 988-1002 (2007).

[8] Sala J.M., Lopez-Gonzalez L.M., Ruiz de Adana M., Eguia J., Flores I., Miguez J.L., *Optimising ventilation-system design for a container–housed engine.* Appl. Energy, **83**, 1125-1138 (2006).

[9] http://www.testequipmentdepot.com/fluke/pdf/ti20.pdf

[10]Bergman T.L., Lavine A.S., Incropera F.P., Dewitt D.P. *Fundamentals of Heat and Mass Transfer*. John Wiley & Sons, (2008).

[11]Carabogdan I. G., Badea A., Brătianu C., Muşatescu V. *Methods of analysis for thermo-energetic processes and systems,* Technical Publishing House , Bucharest (1989).

[12] Welty J., Wicks C.E., Wilson R.E., Rorrer G.L. *Fundamentals of Momentum, Heat, and Mass Transfer*. John Wiley & Sons, 2008.