ENDOREVERSIBLE RECIPROCATING COMPRESSOR OPTIMIZATION

Arpad TÖRÖK[1], Stoian PETRESCU[1], Gheorghe POPESCU[1], Michel FEIDT[2]

[1] POLITEHNICA UNIVERSITY OF BUCHAREST, DEPARTMENT OF ENGINEERING THERMODYNAMICS
[2] L.E.M.T.A., UNIVERSITE DE LORAINE, Nancy, France

Abstract. Reciprocating compressors concur to a very wide range of thermodynamic processes in highly diverse operating conditions. Therefore, optimization of the endoreversible compressor in this paper seeks a new approach for the thermodynamic cycles. Using the Minimum Entropy Generation method and the concepts, the fundamental equations and the Direct Method of Finite Speed Thermodynamics [1-5], the endoreversible compressor operation was analyzed. The main control variable was the *instantaneous speed of the piston*, which will enabled to optimize each cycle in part and to achieve higher performance for the whole process.
Keywords: entropy generation minimization, exergy loss minimization, isothermal transformation, piston speed optimization.

1. INTRODUCTION

Three important factors come into play in the compression and expansion processes: the working gas, characterized by its initial state parameters, the compressor/expander with its constructive characteristics and the environment characterized by certain state parameters and configuration (constructive characteristics of the cooling/heating systems, of the auxiliary systems, etc). During the compression cycle, the working gas parameters can be controlled by changes in the volume occupied by the working gas and by changes in the intensity of heat exchange between gas and environment (by changing the temperature of environment and of coolants, as well as the overall thermal conductance of paths traveled by thermal flows).

Defining and explaining the appropriate performance criteria for reciprocating machinery is one of the main issues addressed in the work concerning these machines, whether it is a general approach [6-9], or it concerns only some particular aspects, and the research on finding a mathematical model that describes, as accurately as possible, the behavior of these machines are numerous [10-15]. In particular, the influence of constructive characteristics on machine performances, the factors affecting the generation of irreversibilities and the methods through which these can be reduced, the behavior of the machinery in specific working conditions, how this behavior is influenced by the nature and parameters of the working gas are analyzed. Many works [17-19] pay particular attention to the way in which the working gas temperature evolves during a work cycle and to the manner in which the heat transfer between fluid and machine components as well as between them and the environment takes place, while other works [26-32] focused on assessing and optimizing the influence which the closing-opening elements, the sealing elements and the lubrication elements have on the performance of the compression cycle.

2. THE MATHEMATICAL MODEL

The model that we will use in this paper to study various types of reciprocating machinery, in various operating modes, belongs to Finite Speed Thermodynamics and forms the basis of the Direct Method, an extremely powerful working tool for studying and designing these category of equipment. This type of approach is proven to be the most suitable to the engineers and designers' expectations, as is proven by the fact that the relationships deduced this way for the direct and reversed Stirling cycles have been validated in various operating modes [1]. The references lists only a few of the large number of works that led to the development of this branch of Irreversible Thermodynamics [1-5]. Finite Speed Thermodynamics analyzes complex systems based on the first principle differential equation, rewritten in such a way as to take account the specificity of the interaction between the gas and a mobile part, as well as the other thermodynamic processes' irreversibilities that occur in closed system (Fig.1):

$$\mathrm{d}U = \delta Q_{ir} - \\ -p_{m,i}\left(1 \pm \frac{a\,w}{\sqrt{3RT_{m,i}}} \pm \frac{b\Delta p_{thr}}{2p_{m,i}} \pm \frac{f\,\Delta p_f}{p_{m,i}}\right)\mathrm{d}V \quad (1)$$

in which, the + sign corresponds to gas compression, and the – sign corresponds to its expansion. In the case of compression, mathematical expression of irreversible work is:

$$\delta W_{ir} = p_{m,i}\left(1+\frac{a\,w}{\sqrt{3RT_{m,i}}}+\frac{b\,\Delta p_{thr}}{2p_{m,i}}+\frac{\Delta p_f}{p_{m,i}}\right)\mathrm{d}V \quad (2)$$

For reciprocating compressors, if all irreversibilities in the system are taken into account, and a Newton law for the heat transfer from the environment to the working fluid (ideal gas) is taken into account, equation (1) also has a non-dimensional form [1]:

$$\frac{c_v\cdot \mathrm{d}T_{m,i}}{R\cdot T_{m,i}} = \left[\pm\frac{K_T\cdot V}{wA_P mR}\cdot\left(1-\frac{T_S}{T_{m,i}}\right)-\right.$$
$$\left.-\left(1\pm k\cdot M+\frac{b\Delta p_{th}}{2p_{m,i}}+\frac{f\,\Delta p_f}{p_{m,i}}\right)\right]\cdot\frac{\mathrm{d}V}{V} \quad (3)$$

In these equations, K_T is the total thermal conductance of the paths travelled by the heat flow from/towards the heat source of temperature T_S to/from the working fluid. The term $k{\cdot}M$ quantifies the effect of the irreversibility caused by finite speed of the piston. At high speed, the pressure P_p in the piston is no longer equal to the average pressure $P_{m,i}$, which leads to additional work consumption, as shown in Figure 1. Although neglected in many of the works devoted to the analysis of thermodynamic processes, this kind of irreversibility has an important weight in devices in which the speed of moving parts is high, especially if the temperature of the gas from these systems reaches low values. The Δp_{thr} and Δp_f terms are the pressure drop caused to the working fluid by the viscous frictions between the fluid layers, as well as by the friction between the latter and the walls, respectively the friction between piston and cylinder wall, b is a coefficient whose value is between 0 and 2, depending on the positioning of throttling device (vane, porous inserts, regenerator etc.) which cause the lamination, and f is a coefficient whose value is between 0 and 1, as a function of the proportion of the heat produced by friction, which remains in the system (the case of $f = 0$ corresponds to the situation in which all the friction heat is discharged into the environment.

It is observed that in equation (1), the f factor appears, which does not appear in equation (2). This factor corresponds to that fraction of heat generated by friction, which is taken up by the system. It shows that there is a difference between "exterior work" provided by the environment and "work introduced into the system". The expression resulting by integrating equation (1) for a certain time, can be put in the form:

$$\begin{aligned} W_{ir} &= W_{rev}+Q_w+Q_{tr}+Q_{fr} = \\ &= W_{rev}+Q_w+Q_{tr}+f\cdot Q_{fr}+(1-f)\cdot Q_{fr} = \\ &= W_{rev}+Q_w+Q_{tr}+Q_{fr}^{in}+Q_{fr}^{out} \end{aligned} \quad (4)$$

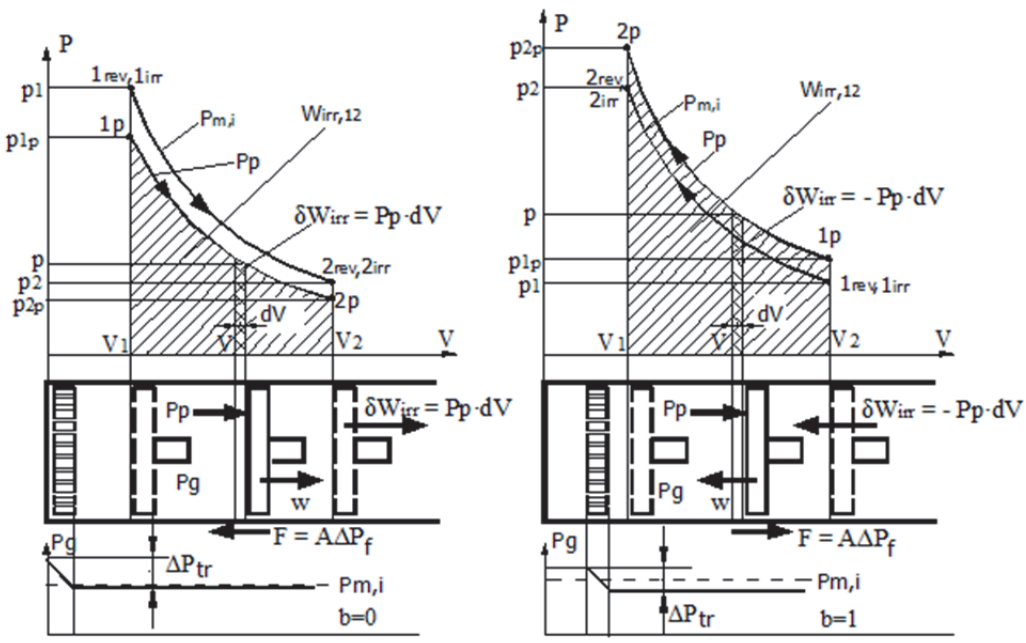

Fig. 1. The gas expansion (A) and compression (B) for finite piston speed.

If we take into account the flow work W_{flow} and the auxiliary work W_{aux} (needed for operating cooling circuits, spraying devices, controlled valve actuator devices, etc), as well as the mechanical η_m and electrical efficiency η_e of actuating mechanism, we will obtain the total energy consumed in that time period:

$$\begin{aligned} W_T &= \underbrace{\left(\frac{1}{\eta_e \cdot \eta_m} - 1\right) \cdot \left(W_{irr} + W_{aux} + W_{flow}\right)}_{Q_{m,e}^{out}} + \\ &+ W_{irr} + W_{aux} + W_{flow} = W_{rev} + W_{aux} + W_{flow} + Q_w + \\ &+ Q_{tr} + Q_{fr}^{in} + Q_{fr}^{out} + Q_{m,e}^{out} = \\ &= W_{rev,shaft} + \underbrace{W_{aux} + Q_e + Q_m + Q_{fr}^{out}}_{Q^{out}} + \\ &+ \underbrace{Q_w + Q_{tr} + Q_{fr}^{in}}_{Q^{in}} = W_{rev,shaft} + Q^{out} + Q^{in} \end{aligned} \tag{5}$$

where $W_{rev,shaft}$ is the work delivered by the actuating mechanism for an reversible system. Therefore, the work required to compress the gas in the compressor, in a process with multiple irreversibilities, equals the work required for a reversible compression, to which is added a certain work that is transformed into an equal amount of heat, distributed between the environment and the working gas.

It must be noted that if a system under optimization consumes more work than anticipated, finding, the cause that lead to that excess, (among multiple irreversibilities), requires knowledge of the manner in which the various types of internal irreversibilities are formed. The effect of all these irreversibilities is reflected in the value of a single measurable parameter (the same for all: the temperature inside the cylinder). On the other hand, all these irreversibilities depend, in one way or another, on the piston speed.

3. ENDOREVERSIBLE RECIPROCATING COMPRESSOR

The introduction of the endoreversible system by Rubin [34] was an important progress in the study of irreversible processes with finite development speed, because this concept highlights the fundamental differences between its external and internal irreversibilities. External irreversibilities occur as a result of thermal interaction between the system and the environment and their amplitude increases along with the increase in the temperature difference between the two systems. With this increase, the intensity of the flows of energy, entropy and exergy between them also increases, and thus the system availability to produce or absorb external work increases. The exergy which is lost in the heat transfer processes refers to a potential work, which could have been added to the exchange of energy between the system and the environment, if the heat transfer process would have been reversible (without temperature differences, but with infinitely low speed).

On the contrary, the internal irreversibilities destroy the exergy in the system (both its own and that received from the outside during the processes) and lead, ultimately, to transforming the work received from the outside, or that produced by the system, into thermal energy. The internal entropy generation speed depends on many parameters: the nature of the process, its speed of the process, the working gas properties and the device's constructive characteristics. In some processes only certain types of irreversibilties occur. At low process progress speeds, or through various constructive solutions, the created internal entropy can be greatly reduced but, in all cases, the performances of an endoirreversible system are lower to the endoreversible (ideal) system whose other parameters are identical. A fundamental differentiation between the two types of irreversibilities is made by Berry and Orlov [35] by an assertion of the following principle of optimal control: solutions of optimal problems, in a finite time, of a real thermodynamic system, are bordered by the solution of the optimal problem of the system without internal irreversibilties.

Due to these considerations, the working methodology which will be best suited for finding the optimal evolution of the compressor in an operating regimen imposed is to find, for the imposed conditions, the optimum speed of the piston, in the hypothetical case of an endoreversible compressor (no internal irreversibilities), applying the principle of minimum rate for entropy generation. Then, by calculating the internal irreversibilties for the found trajectory and considering them as additional restrictions, we modify the piston path so that after meeting these restrictions, the rate of entropy generation will be minimum.

4. ENDOREVERSIBLE RECIPROCATING COMPRESSOR OPTIMIZATION

The endoreversible compressor's mathematical model is obtained by canceling the internal irreversibilities in equation (3). If $w \ll c$, and M, Δp_{thr}, $\Delta p_f \rightarrow 0$. Hence

$$\frac{c_v \cdot \mathrm{d}T_{m,i}}{R \cdot T_{m,i}} = \left[\frac{K_T \cdot V}{wA_P mR} \cdot \frac{T_{m,i} - T_S}{T_{m,i}} - 1\right] \cdot \frac{\mathrm{d}V}{V}$$

$$m \cdot c_v \cdot \mathrm{d}T = \frac{K_T}{wA_P} \cdot \left(T - T_S\right) \cdot dV - p \cdot \mathrm{d}V \quad (6)$$

The lack of any kind of internal irreversibilities implies that both pressure and temperature are uniform throughout the system, throughout the duration of compression (as a result we have drop out the notations $T_{m,i}$, $v_{m,i}$ and $p_{m,i}$). If, in real systems, pressure non-uniformities appear only at high piston speeds, and the density one fall within the Boussinesque approximation [9], the temperature ones appear even at very low speeds. They are generated by the non-uniformity of the heat transfer conditions, both within the system and at its boundaries, as well as due to its reduced speed of propagation (compared to the speed of propagation of pressure disturbances) from one interior point to another, due to the reduced heat conductibility of the gasses. In fact, the occurrence of these heat non-uniformities in real systems is part of the heat exchange mechanism with the environment and is a necessary condition for carrying out this exchange. It can be proven that this temperature non-uniformity does not alter the increase in entropy of the environment, and for the system it produces a temporary decrease of entropy, which do not result in an additional increase of the mechanical power introduced by the piston. Therefore, for the endoreversible processes, will use the hypothesis of a uniform temperature, a simplification that can be found in most papers [9-15]

In equation (6), dV is negative, while T_S can vary continuously, or discontinuously (when, during the same cycle, the working gas exchanges thermal energy with several tanks), and the temperature difference T-T_S can be negative (which leads to an increase in the internal energy of the gas), positive (in which case, the direction of variation of the internal energy depends on the sign of the difference between the received mechanical energy and the given heat energy) , or it can change the sign during the cycle. Because of these multiple possibilities of development, the reciprocating compressor can meet a very wide range of functions in the most diverse operating regimes. In each of these cases, the compressor may be imposed different performance criteria and various types of constraints. The complexity of the optimization problem is however, only apparent. It can be greatly simplified if ones rely on a number of previously obtained results [36-39] concerning the behavior of thermodynamic systems, when they pass, in a limited period of time, from an initial state to a final one, exchanging thermal energy with a number of thermostats, or sources with finite thermal capacity. In this evolution, the maximum exergetic efficiency (and, in a specific case, the maximum efficiency of transforming thermal energy into mechanical energy) is achieved when, meeting all imposed conditions, the systems follow an optimal path, along which entropy generation is minimal. This condition is satisfied only if the rate of entropy production is constant, criterion which also meets the minimum thermodynamic length principle [38] and the principle of equipartition of thermodynamic forces [39, 40]. The accomplishment of this condition leads, for different values of this rate (or for equal values, when the criteria are equivalent), to maximizing any energy criterion, even of other criteria, if it is calculated based on energy consumption and production: maximum power, thermal efficiency, exergetic efficiency, environmental efficiency, economic profit, etc., as well as minimizing entropy production and minimizing exergy loss.

Customizing these results for the system formed by the gas in an endoreversible compressor that evolves between the initial state, characterized by the state sizes, p_a , v_a and T_a and a final state, characterized by the state sizes, p_e , v_e and T_e, in an imposed time interval τ, exchanging heat energy with an infinite reservoir of constant temperature T_0, can consider that it follows an optimal trajectory when the transition from the initial state to the final state occurs through a succession of three processes: an instantaneous adiabatic process, an isothermal one of duration τ and again an instantaneous adiabatic process (a „fast-slow-fast" profile), the isothermal temperature being stable depending on all imposed restriction and on the chosen performance criterion. We will analyze some particular cases:

A. Adiabatic compressor. The operating regimes in which such a compressor is required are those that require that the thermal regimen of the environment where the compressor is located is not modified by this placement and this requires that the transition occurs , in a minimum time, from a input temperature T_a to a output temperature T_e, or from a pressure p_a to a pressure p_e. The endoreversible compressor that does not interact thermally with the outside environment is an ideal compressor, which executes a reversible adiabatic compression. The equation (6) with $K_T=0$, leads to the adiabatic equation $TV^{k-1}=const$, equation in which neither time nor speed, appear as variables. The working gas temperature varies depending on the variation in volume, independently of the piston speed, thus, in order to obtain maximum flow and maximum power, the compression should occur at the piston's maximum speed. The isentropic and

exergetic efficiency of the transformation are unitary, and the entropy production is null (also fulfilling the optimum process criterion: constant entropy generation rate).

More often optimizing the adiabatic compression is done in correlation with a number of constraints. For example, a high acceleration leads to the emergence of inertial forces, which produce large mechanical stresses in the actuating system's various parts. Limiting the maximum acceleration leads to speed trajectories in the form of zigzag oscillations, identical for both semi-periods (Fig. 2A). If this limitation is added to the piston's maximum speed limitation, the shape of the oscillations becomes trapezoidal if by moving with maximum acceleration, the limit speed is reached before half-stroke (Fig. 2B). In both cases, the shaft's RPM and the power required at the shaft are higher. If a limit is also imposed on the shaft's RPM, it is equivalent to a minimum limit of the cycle period. In this case, the extra time (relative to the previous case) is allocated in full to the compression phase, to reduce instantaneous power (Fig. 2C). If both the shaft RPM and the instantaneous power at the shaft are limited, the limit also affects the acceleration: whereas in the intake phase, the pressure forces acting on the piston are low, the power at the shaft is consumed in order to overcome the inertia and translation forces F_{tr} (the inertial force of the piston group to which the connecting rod's translation inertial mass is added). From here the maximum permissible acceleration for this phase results. To once again achieve the maximum speed required for adiabatic compression, the piston acceleration will be lower (Fig. 2D) due to the action of pressure forces which increase as the piston moves:

$$F_{tr} \cdot \frac{\mathrm{d}x}{\mathrm{d}t} + p_a \cdot A_P \cdot \left(\frac{S}{S-x}\right)^k \cdot \frac{\mathrm{d}x}{\mathrm{d}t} = P_{\max} \qquad (7)$$

For an endoreversible compressor, the left member of the equation is added the term corresponding to the power consumed due to the friction.

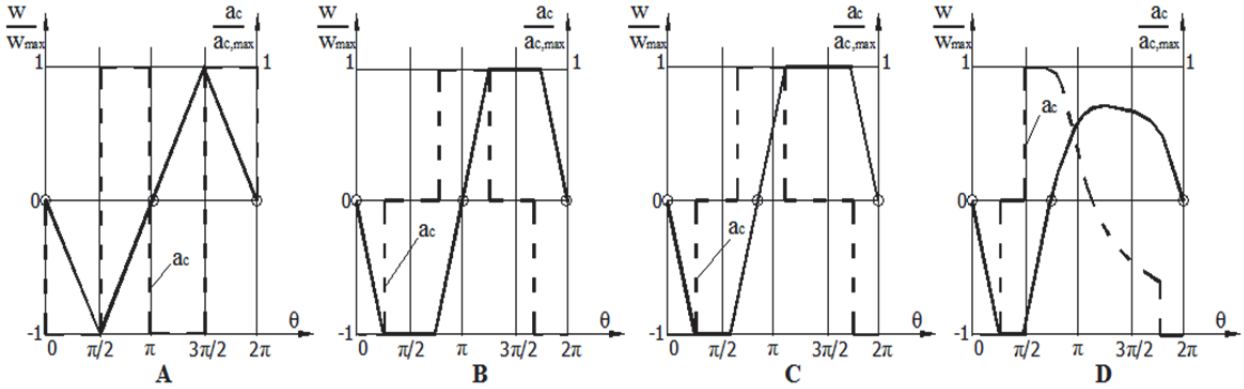

Fig. 2. The optimal piston speed for an adiabatic endoreversible compression.
A: $a_c < a_{max}$, *B:* $a_c < a_{max}$, $w < w_{max}$, *C:* $a_c < a_{max}$, $w < w_{max}$, $\omega > \omega_{min}$, *D:* $w < w_{max}$ and $P < P_{max}$.

B. Polytropic compressor. In practice, the exchange of heat with the environment cannot be avoided, even more, the increase of the piston speed leads, on the one hand, to an increase in interior heat transfer coefficient h_i , and on the other hand in the increase of friction losses. Even though the compressor cylinder is heat insulated, there will always be a heat transfer between the gas (whose temperature is changed depending on the position of the piston, oscillating between the T_a and T_e values) and the cylinder, whose temperature variation for one cycle time is insignificant. Due to the difference between the cylinder's heat capacity $m_c \cdot c_c$, much higher than the gas' heat capacity $m_g \cdot c_v$, and due to the high difference between the time constants of the three successive processes through which the heat exchange with the environment is carried out (slow gas-cylinder convection process, fast conduction process through the cylinder wall, respectively slow convection process between the cylinder and the environment), the difference between the heat intake and the heat released by the cylinder during a cycle only slightly changes the temperature. After the compressor enters nominal (stationary) operating regime, the compressor wall temperature reach a nearly constant value T_w, intermediary between T_a and T_e . In stationary regimen, during the first part of the compression phase, the gas receives from the wall a quantity of heat, and in the second part, it releases another quantity, the difference between those quantities being equal to the heat energy transferred by the wall to the environment. The temperature value T_w satisfies the energy balance equation of the wall for

a period τ, and depends on the external source's average temperature T_1:

$$\int_0^{\tau} h_i A_i \left(T - T_w\right) \cdot \mathrm{d}t = \int_0^{\tau} h_e A_e \left(T_w - T_1\right) \cdot \mathrm{d}t$$

which for a constant T_1, becomes:

$$\int_0^{\tau} h_i A_i \left(T - T_w\right) \cdot \mathrm{d}t = \tau \cdot \left(T_w - T_1\right) \cdot \int_0^{\tau} h_e A_e \cdot \mathrm{d}t \,, \quad (8)$$

where T is the instantaneous temperature of the gas in the cylinder, T_1 is the external environment instantaneous temperature, and A_i, A_e, h_i, h_e are areas of the inner surfaces, respectively outer areas, through which the exchange of heat is carried out and the heat transfer coefficients between the walls and the inner gas. It must be highlighted that A_e is not to be confused with the cylinder's outer surface, because it also includes its inner (variable size) surface , located in the back of the piston.

If there is no exchange of heat with the external environment, the wall's temperature T_w would stabilize after a number of cycles from starting the compressor, at a value equal to the average gas temperature for the duration of a cycle. The heat exchange with an outside source of temperature T_1 will displace this value in one direction or the other, depending on the sign of the difference T_w–T_1, and the amplitude of the displacement depends on the difference between h_iA_i and h_eA_e . For $h_i \ll h_e$, the temperature T_w will be approximately equal to the temperature of the source. The heat exchange between the working gas and the environment, through the cylinder walls, the piston, the lubricants and the cooling agents is quantitatively higher at lower piston speeds (due to the longer cycle period) and higher compression ratios. The presence of this heat exchange makes the compression process polytropic.

Figure 3 shows some special cases of the situation when $h_i \ll h_e$:

▪ For $T_1 \approx T_w$ (Fig. 3A), during intake and at the beginning of the compression phase, the gas will absorb an amount of heat from the wall, which it will transfer back during the second part of the compression phase (after its temperature exceeds that of the wall) and during the overflow phase. If this sequence of processes, finishes with a 2-1 expansion, would lead to the emergence of a heat pump. The heat equivalent to the work consumed by this presumed pump will be taken by the working gas, from which it will be taken by the wall and transmitted into the environment. For a given compressor, the work taken up by this pump increases when the cycle duration increases. In spite of this heat exchange between the compressor and the environment, the overflow gas parameters are identical to those of a compressed isentropic gas. If the compressed gas is stored in a tank and if at the plane corresponding to that piston position where the average temperature of the gas in the compressor reaches the value t_w is mounted in the environment, an insulating divider wall (dividing the environment into two tanks, one cold and one hot), the heat pump becomes real, transferring heat energy from the cold tank to the hot one. This compressor will deliver the same compressed gas flow as an adiabatic compressor, with the same parameters, but will consume more power. This difference in power will be present in the internal energy of the hot tank.

▪ For $T_1 \approx T_a$ (Fig. 3B), the gas introduced into the compressor (point 1) is permanently cooled down, in all three phases and will be discharged (point 2) at a temperature lower than that of the corresponding isentropic compression (2r), much lower than the speed of the piston, mediated for the whole cycle, is lower.

▪ For $T_1 \approx T_e$ (Fig. 3C), the working gas is heated during the whole cycle and will be discharged (point 2) at a higher temperature than that corresponding to the isentropic compression (point 2). In the same way, the temperature increases if the cycle duration increases.

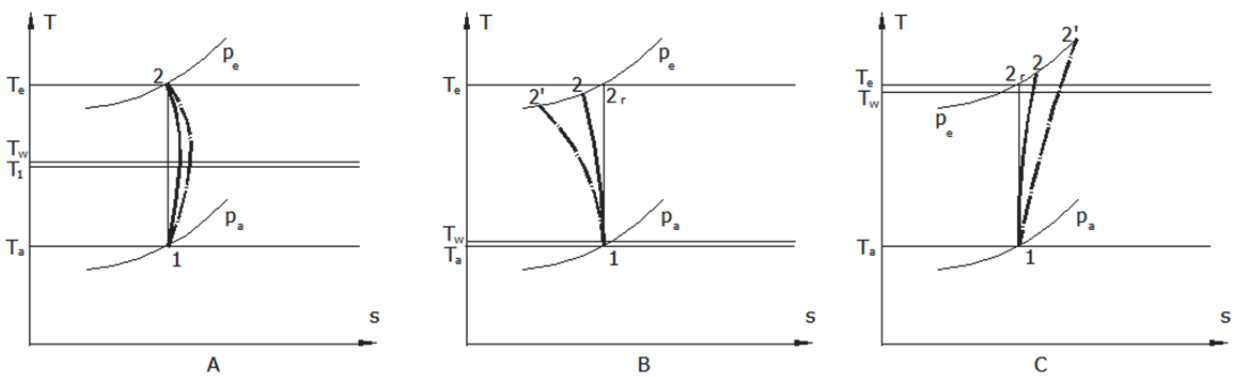

Fig. 3. Endoreversible quasi-static adiabatic compression for $h_i \ll h_e$. *A:* $T_1=T_w$, *B:* $T_1=T_a$, *C:* $T_1=T_e$.

Polytropic compression occurs most often as an effect of external irreversibilities on a process that was desired to be adiabatic, or one that was desired to be isothermal. As a consequence, optimizing this process means finding the piston path by which polytropic transformation is replaced with an adiabatic one, or with an adiabatic-isothermal-adiabatic sequence by which the criterion chosen shall be maximized. In this case, in accordance with the adopted methodology, it first optimizes the endoreversible adiabatic compressor, or the isothermal one, as appropriate. For this compressor, the heat exchange between the gas and the environment constitutes an irreversibility, which will be taken into account, together with the internal irreversibilities, for the subsequent steps of the optimization procedure.

Because in order for the rate of entropy generation in a process in which heat is exchanged with a source of fixed temperature to be constant, the process must be isothermal. Because, if this source is located outside of the cylinder, between the source and the system there will always be its wall, whose temperature, as was seen, will stabilize, in most cases, at an nearly constant value. As a result, the compression processes inside a compressor that exchanges heat only with a source outside of the cylinder, are optimal only if they are isothermal, or adiabatic. An optimal compression or expansion, in which the adiabatic exponent is different from 1 and different from *k,* may occur if the gas interacts with an internal heat source, whose temperature is variable, and during this interaction, the total entropy generation occurs at a constant rate. In practice, such situations arise where, during the compression of a gas, liquid coolant is sprayed at a variable flow, with the aim of transforming the polytropic process into one close to an isothermal process. In addition to the piston speed, optimizing this type of compression [42], also introduces the sprayed and fluid flow as a control variable. Similarly, the expansion of a gas in the presence of internal combustion of a specific quantity of fuel (combustion engines) can produce maximum power if the piston travels an optimal trajectory [43].

C. Isothermal classical compressor. Very often, during the design of compression process, the question of limiting the temperature of the discharged gas, or of the wall cylinder is posed. In practice, the problem is resolved by breaking down the process into multiple compression stages, with intermediate cooling of the working gas. For lower compression ratios, it is enough to intensify the heat exchange between the gas and the cold source, accompanied by a limitation of the RPM, in order to ensure the time required for this thermal energy exchange. In this way, the process becomes polytropic. Both solutions also lead to a reduction of the work consumed for compressing one unit of mass.

In the polytropic compression processes, the working gas passes from its initial state, characterized by the p_a, v_a and T_a to a final state, characterized by the sizes p_e, v_e and T_e, in a time period of τ (corresponding to an angular speed of ω) and with a total work consumption (including auxiliary phases) of W_c. By controlling the speed of the piston inside the compression cycle, any of these processes can be replaced with an optimized process. The first stage of the optimization is to optimize the compression stage's auxiliary phases, a stage following which the cycle duration can be reduced considerably with positive consequences on the improvement of most of the performance criteria. In order to highlight the effects of optimizing the compression phase, we shall separate this phase from the others and we will analyze the processes that occur in the time t_c interval separately. In the processes that take place in this period of time, for the most important performance criteria, as mentioned before, the optimal trajectory is composed of an instantaneous adiabatic (resulting from the piston moving at full speed), followed by an isothermal, and again by a very fast adiabatic. The isothermal process temperature depends on the constraints imposed and on performance criterion to be optimized. In accordance with the principle of entropy minimization, compared to a polytropic process of duration t_c, which consumes a work W_c, an optimized process, of AIA type (adiabatic-isothermal-adiabatic), if it has the same duration t_c, consumes less work, and if it consumes the same work, in takes place in a shorter time t_c.

When the isothermal temperature is T_e (the process being preceded by an very fast adiabatic compression) the shortest time necessary to achieve the desired compression ratio and the highest consumption of technical work cycle is achieved, and as a result, the highest discharged gas flow, the highest thermal power delivered to the cold source, the highest rate of increase of exergy, etc. The work consumed during the three phases of compression is [44]:

$$W_c = -\frac{k}{k-1}\cdot mR\cdot\left(T_e - T_a\right) - \\ -mR\cdot T_e\cdot\ln\left[\frac{p_e}{p_a}\cdot\left(\frac{T_e}{T_a}\right)^{\frac{k}{k-1}}\right] - mRT_a\left(1-\frac{p_e}{p_0}\right), \quad (9)$$

where p_0 is the pressure on the piston's passive face. Most often, $p_0 = p_a$. The duration of the compression phase is:

$$t_c = \frac{mRT_e}{K_T(T_e - T_1)} \cdot ln\left[\frac{p_e}{p_a} \cdot \left(\frac{T_e}{T_a}\right)^{\frac{k}{k-1}}\right] \quad , \quad (10)$$

where T_1 is the temperature of the cold source. Most often, $T_1 = T_a$.

If the global heat transfer coefficient K_T between the working gas and the cold source is high, the shaft's RPM n resulting from this optimization can surpass an imposed RPM n_{max}. In this case, keeping constant the time allocated to the other phases, and increasing the time allocated to the compression phase, pressure p_e can be achieved with a lower consumption of work, on an isothermal of lower temperature, traveled in the given time, followed by an instantaneous adiabatic through which the prescribed temperature is reached. The time required to travel isothermally T^* is, for the simple effect piston: $t_c = \tau - t_{d,a} - t_r$, and for the double effect one, $t_c = \tau - t_r$. For t_c, the following relationship comes from (10):

$$t_c = \frac{mRT^{\bullet}}{K_T(T^{\bullet} - T_1)} \cdot ln\left[\frac{p_e}{p_a} \cdot \left(\frac{T_e}{T_a}\right)^{\frac{k}{k-1}}\right] \quad (11)$$

from which can we find the optimal temperature T^*. So, for each main shaft RPM, there is an optimum temperature of the isothermal process, for which the discharged gas flow with pressure p_e and temperature T_e is maximum.

If $T_w = T_1 = T_a = T_0$, and $p_a = p_0$, as a result of the compression process, the exergy of a working gas batch becomes:

$$Ex_e = \frac{k}{k-1} \cdot mR \cdot (T_e - T_0) + \\ + mRT_0 \cdot \ln\left[\frac{p_e}{p_0} \cdot \left(\frac{T_e}{T_0}\right)^{\frac{k}{k-1}}\right] - mRT_0\left(1 - \frac{p_e}{p_0}\right) \quad (12)$$

This is the maximum work that can be achieved through expansion, from this quantity of gas, when it evolves reversibly until it reaches the same parameters as the environment (T_0 , p_0). However, this work can be obtained only if the compressed gas, after discharge, maintains its parameters unchanged until the moment of expansion. In practice, this is quite rare. Most often, the discharged gas is temporarily stored in a tank, or it is introduced into a duct to be transported. In both cases, the gas temperature lowers, tending towards the environment's temperature, and the compressor is restarted as often as required in order to restore pressure p_e . In these circumstances, the question arises of finding a strategy whereby, from certain amount of work consumed by the compressor, to obtain in an expander as much useful work as possible. We find a Pareto optimization of this problem in papers [45, 47], in which it is proven that for a preset time interval, the minimum consumption of work to compress the gas of temperature T_0 and pressure p_0 until we obtain a gas of temperature T_e and pressure p_e, is obtained through an AIA process in which the temperature at which the isothermal process takes place is $T_1 = \sqrt{T_0 \cdot T_e}$. Also, for a fixed time interval, the maximum work that can be obtained by expanding the gas of temperature T_0 and pressure p_e until we obtain a gas of temperature T_e and pressure p_0, is obtained through an AIA process in which the temperature at which the isothermal process takes place is $T_1 = \sqrt{T_0 \cdot T_e}$ [44].

Another issue that comes up often in practical situations is the increase of the exergetic efficiency of compression processes through the recovery of part of the heat exhausted during these processes and delivering this energy to other potential users. Optimization of such techniques is dependent on the restrictions imposed to the supplied energy (usually a minimum required temperature) and on the intended performance criterion. If a maximum amount of energy is required, under maximum exergetic efficiency, the optimal solution is to use an optimized adiabatic compressor, coupled to an optimized heat exchanger at a constant pressure (Fig. 3).

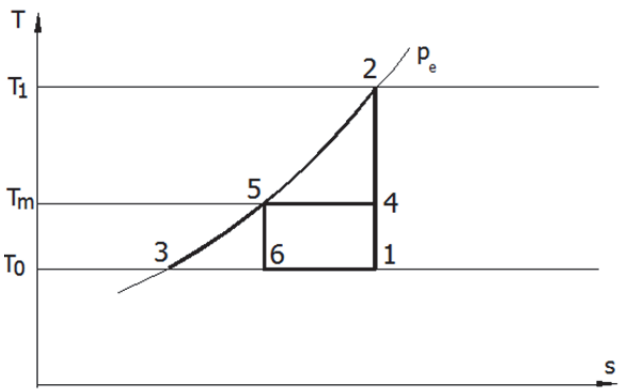

Fig. 3. Maximizing the adiabatic compressor's exergy.

It will provide compressed gas at the desired pressure p_e and the environment temperature T_0, and the thermal agent will receive all heat resulting

from the compression. The time required for these processes is minimal, and the exergetic efficiency is close to maximum. If we wish to recover the energy in mechanical form, the maximum energy that can be recovered using a single Carnot-type engine is obtained when the area of rectangle 14561 is maximum, which occurs when:

$$T_m = T_1 / \sqrt{e} = 0,606 \cdot T_1$$

5. CONCLUSIONS

The reciprocating machines are designed to modify the gases' parameters and optimizing their development is a priority. The solution proposed by this paper is based on the minimum entropy generation method. Using the results obtained in previous works by the Finite Time Thermodynamics [38-40] and by the Thermodynamics with Finite Speed [1-5], it is sought for a single cycle of reciprocating machines, that evolution of piston path for which the entropy generation rate is constant and, at the same time, maximize the chosen performance criterion. Whatever this criterion, one can obtain his optimal limit into the endoreversible version of that device. In this study, based on a mathematical model of the endoreversible compressor, optimal paths of the piston, for different operating conditions and different constraints are sought, when the compressor exchanges heat with an infinite sink at constant temperature T_S. Constant generation rate of entropy can be obtained in the adiabatic endoreversible compressor ($ds/dt = 0$), or in the one isothermal, when $T \neq T_S$ (for $T = T_S$, $\rightarrow ds/dt = 0$, the compressor is reversible). In further works, we will analyse also the endoreversible expander, we will describe the physical model of a reciprocating machines, compressor and expander), achievable with current technical means, the optimisation methods for the irreversible compressors and expanders and the optimisation methods for the cyclic machines wich contains compressors and expanders.

Nomenclature

Roman letter symbols

A	area, m^2
a,b	coefficients
c	average molecular speed, $m\ s^{-1}$
c_p, c_v	specific heats, $J\ kg^{-1}\ K^{-1}$
D	diameter, m
F	force, N
f	coefficient related to the friction contribution $\in$ (0, 1)
h	heat transfer coefficient, $W\ m^{-2}\ K^{-1}$
K	the overall heat transfer coefficient, $W\ m^{-2}\ K^{-1}$
k	heat capacity ratio
L	lenght, m
m	mass, kg
$\dot{m}$	mass flow rate, $kg\ s^{-1}$
p	pressure, Pa
Δp	pressure loss, Pa
Q	heat, J
$\dot{q}$	heat flow rate, $J\ s^{-1}$
R	gas constant, $J\ kg^{-1}\ K^{-1}$
S	stroke, m
	entropy, $J\ K^{-1}$
s	specific entropy, $J\ kg^{-1} K^{-1}$
x	length coordinate, m
M	Mach number
T	temperature, K
U	internal energy, J
V	volume, m^3
W	work, J
w	specific work, $J\ kg^{-1}$
	piston speed, $m\ s^{-1}$

Greek symbols

α	thermal diffusivity, $m^2\ s^{-1}$
λ	thermal conductivity, $W\ m^{-1}\ K^{-1}$
π	compression ratio in the compressor
ρ	density, $kg\ m^{-3}$
Δ	variation

Subscripts

0	initial	irr	irreversible
a	suction	m	average
aux	auxiliary		mechanical
e	exhaust	p	piston
	electrical	rev	reversible
g	gas	thr	throttling
i	instantaneous	w	wall
	order number	S	heat source, sink
f	friction	T	total
	final		

Superscripts

in	*input*
out	*output*

6. REFERENCES

[1] Petrescu S., Costea M., *Developement of thermodynamics with finite speed and direct method*, Agir Publishing, 2011.

[2] Petrescu S., Harman C., Costea M., Petre C., Dobre C., *Irreversible finite speed thermodynamics (ifst) in simple closed systems. I. Fundamental Concepts*, Termotehnica Magazine 2/2009

[3] Petrescu S., Costea M., Harman C., *Irreversible thermodynamics in complex systems: Irreversible Isothermal Processes with Finite Speed, Friction and Throttling*, Termotehnica Magazine, 2/2010.

[4] Petrescu S., Harman C., Bejan A., Costea M., Dobre C., *Carnot cycle with external and internal irreversibilities analyzed in Thermodynamics with Finite Speed with the Direct Method*, Termotehnica, 2/2011, http://www.agir.ro/buletine/1112.pdf

[5] Petrescu S., Feidt M., Costea M., Petre C., Boriaru N., *Calcul de la génération d'entropie dans un moteur irreversible à échange thermiques isothermes à l'aide de*

la thermodynamique à vitesse finie et de la méthode directe, Termotehnica Magazine no. 2/2008.

[6] Heywood J. B., *Internal Combustion Engine Fundamentals*, New York, McGraw-Hill, 2000.

[7] Hanlon P. C., *Compressor handbook*, Printed and bound by R. R. Donnelley & Sons Company, McGraw-Hill, 2001

[8] Popescu Gh., Porneală S., Vasilescu E., Apostol V., Dobrovicescu A., Ioniţă C., *Refrigeration equipment and facilities*, Bucharest, Printech, 2005

[9] Cengel Y. A., Boles M. A., *Thermodynamics: An Engineering Approach*, McGraw Hill, New York, 2nd edition, 1994

[10] Stouffs P., Tazerout M., Wauters P., *Thermodynamic analysis of reciprocating compressors*, Int. J. Therm. Sci. (2001) 40, 52–66, Éditions scientifiques et médicales Elsevier SAS, S1290-0729(00)01187-X/FLA

[11] Kerr S. V., Hoare R. G., MacLaren J. F. T., *Optimum Design of Reciprocating Compressors to Meet Thermodynamic Criteria*, (1980). International Compressor Engineering Conference. Paper 299. http://docs.lib.purdue.edu/cgi/viewcontent.cgi?article=1298&context=icec

[12] Pérez-Segarra C. D., Rigola J., Oliva A., *Thermal And Fluid Dynamic Characterization Of Hermetic Reciprocating Compressors*, International Compressor Engineering Conference. Paper 1507, 2002, http://docs.lib.purdue.edu/icec/1507

[13] Schreiner J. E., Deschamps C. J., Barbosa J. R., *Theoretical Analysis of the Volumetric Efficiency Reduction in Reciprocating Compressors due to In-Cylinder Thermodynamics*, International Compressor Engineering Conference Paper, 2010. http://docs.lib. purdue.edu/cgi/viewcontent.cgi?article=3003&context=icec

[14] Chaudhary S., Gupta D., *Performance Analysis of Reciprocating Refrigerant Compressor*, International Journal of Science and Research (IJSR), India Online ISSN: 2319-7064 Volume 2 Issue 6, June 2013, http://www.ijsr.net/archive/v2i6/IJSRON20131085.pdf

[15] Winandya E., Saavedra C. O., Lebrun J., *Simplified modelling of an open-type reciprocating compressor*, Int. J. Therm. Sci., 41, (2002), 183–192. http://www.compressor.cn/Tech/UpFiles_Tech/2005/2002911-215249.pdf

[16] Riffe, D. R., *High Efficiency Reciprocating Compressors*, International Compressor Engineering Conference. Paper 181, 1976, http://docs.lib.purdue.edu/ icec/181

[17] Dutra T., Deschamps C. J., *Experimental Investigation of Heat Transfer in Components of a Hermetic Reciprocating Compressor* (2010). International Compressor Engineering Conference. Paper 2002

[18] Serkan K., Emre O., *Thermal Analysis of a Small Hermetic Reciprocating Compressor*, International Compressor Engineering Conference, Paper 1993, 2010. http://docs.lib.purdue.edu/cgi/viewcontent.cgi?article=2992&context=icec

[19] Brok S. W., Touber S., Van der Meer J. S., *Modeling of Cylinder Heat Transfer - Large Effort, Little Effect?*, International Compressor Engineering Conference, 1980, Paper 305, http://docs.lib.purdue.edu/icec/305

[20] Frezzotti A., Gibelli L., *A kinetic model for fluid--wall interaction*, Proceedings of the Institution of Mechanical Engineers, Part C: Journal of Mechanical Engineering Science 2008 222: 787, http://pic.sagepub.com/content/222/5/787

[21] Fagotti F., Prata A. T., *A New Correlation for Instantaneous Heat Transfer Between Gas and Cylinder in Reciprocating Compressors* (1998)., International Compressor Engineering Conference. Paper 1351, http://docs.lib.purdue.edu/icec/1351

[22] Disconzi F. P., Pereira E. L.L., Deschamps C. J., *Development of an In-Cylinder Heat Transfer Correlation for Reciprocating Compressors*, International Compressor Engineering Conference at Purdue, July 16-19, 2012

[23] Faulkner H. B., *An investigation of instantaheous heat transfer during compression and expansion in reciprocating gas handling equipment*, Submitted to the department of mechanical engineering in partial fulfillment of the requirements for the degree of doctor of philosophy in mechanical engineering at the Massachusetts Institute of Technology, May 1983

[24] Chafe J. N., *A study of gas spring heat transfer in reciprocating cryogenic machinery*, Submitted to the department of mechanical engineering in partial fulfillment of the requirements for the degree of doctor of philosophy in mechanical engineering at the Massachusetts Institute of Technology, July 1988

[25] Kornhauser A. A., *Gas-wall heat transfer during compression and expansion*, Submitted to the department of mechanical engineering in partial fulfillment of the requirements for the degree of doctor of philosophy in mechanical engineering at the Massachusetts Institute of Technology, January 1989

[26] Destoop T., *Compresseurs volumétriques*, Techniques de l'Ingénieur, traité Génie mécanique, B 4 220 – 1, http://fredericlalanne.free.fr/bep/beptechnologie/themesetudebep/moteurs/RES/Compresseur%20Volum%E9trique.pdf

[27] Dutra T., Deschamps C. J., *Experimental Investigation of Heat Transfer in Components of a Hermetic Reciprocating Compressor* (2010). International Compressor Engineering Conference. Paper 2002, http://www.academia.edu/3830167/Experimental_Investigation_of_Heat_Transfer_in_Components_of_a_Hermetic_Reciprocating_Compressor

[28] Almasi A., *Advanced technologies in reciprocating compressor with respect to performance and reliability*, 5th International Advanced Technologies Symposium (IATS'09), May 13-15, 2009, Karabuk, Turkey

[29] Touber S., *A contribution to the improvement of compressor valve design*, Thesis for obtaining the degree of doctor in technical sciences, Delft University, July 1976

[30] Giacomelli E., Falciani F., Volterrani G., Fani R., *Simulation of cylinder valves for reciprocating compressors*, Proceedings of ESDA2006 8th Biennial ASME Conference on Engineering Systems Design and Analysis, July 4-7, 2006, Torino, Italy

[31] Angeletti A., Biancolini M.E., Costa E., Urbinati M., *Optimisation of reed valves dynamics by means of Fluid Structure Interaction Modelling*, University of Rome Tor Vergata, Mechanical Engineering Department, Via Politecnico 1, 00133 Roma, Italy.

[32] Aigner R., Meyer G., Steinrück H., *Valve Dynamics and Internal Waves in a Reciprocating Compressor*, 4th Conference of the EFRC, June 9th / 10th, 2005, Antwerp

[33] Derek Woollatt, *Reciprocating compressor valve design: optimizing valve life and reliability*, Dresser-Rand, Painted Post, N.Y., USA, http://docs.lib.purdue.edu/me/

[34] Rubin M., *Optimal configuration of a class of irreversible heat engines*, Physics Review A, Vol. 19, 1979, pp. 1272-1276. http://dx.doi.org/10.1103/PhysRevA.19.1272

[35] Orlov V. N., Berry S., *Power and efficiency limits for internal combustion engines via methods of finite-time thermodynamics*, J. Appl. Phys. 74 (7), 1 October 1993,

[36] Salamon P., Nitzan A., *Finite thermodynamics of a Newton's law Carnot cycle*, J. Chem. Phys. 74 , 3546-3560 (1981), http://atto.tau.ac.il/~nitzan/nitzan.html

[37] Salamon P., Nitzan A., Andresen B., Berry R. S., *Minimum entropy production and the optimization of heat engines*; Phys. Rev. A. 21, 2115 (1980).

[38] Salamon P., Berry R. S., *Thermodynamic length and dissipated availability*, Phys. Rev. Lett. 51, 1127-30, 1983

[39] Bedeaux D., Standaert F., Hemmes K., Kjelstrup S., *Optimization of Processes by Equipartition*, J. Non-Equilib. Thermodyn., 1999 Vol. 24 pp. 242±259

[40] Sauar E., Kjelstrup Ratkje S., Lien K. M., *Equipartition of Forces: A New Principle for Process Design and Optimization*, Ind. Eng. Chem. Res. 1996, 35, 4147-4153, https://www.etde.org/etdeweb/purl.cover.jsp?purl=/20286138-LFUQAO/native/

[41] Salamon P., Nulton J. D., Siragusa G., Andersen T. R., Limon A., *Principles of Control Thermodynamics*, Energy, 26, 307-319 (2001). http://www.sci.sdsu.edu/~salamon/PrinciplesTex.pdf

[42] Saadat M., Shirazi F. A., Li P. Y., *Modeling and trajectory optimization of water spray cooling in a liquid piston air compressor*, Proceedings of the ASME 2013 Heat Transfer Summer Conference, July 14-19, 2013, Minneapolis, MN, USA

[43] Hoffmann K. H., Watowich S. J., Berry R. S., *Optimal paths for thermodynamic systems: The ideal diesel cycle*, J. Appl. Phys. 58, 2125-34 (1985),

[44] Feidt M., *Thermodynamique et optimisation energetique des systemes et procedes*, Tec&Doc, 2e Edition, 1996

[45] C. Sancken and P. Y. Li, *Optimal Efficiency-Power Relationship for an Air Motor-Compressor in an Energy Storage and Regeneration System*, Proceedings of the ASME 2009 Dynamic Systems and Control Conference #2749, DSCC2009/Bath Symposium PTMC, Hollywood, 2009

[46] Shirazi F. A., Saadat M., Bo Yan, Perry Y. Li, Simon T. W., *Optimal control experimentation of compression trajectories for a liquid piston air compressor*, Proceedings of the ASME 2013 Heat Transfer Summer Conference HT2013, July 14-19, 2013, Minneapolis, MN, USA, HT2013-17613

[47] Stosic N., Kovacevic A., Hanjalic K., Milutinovic Lj., *Mathematical Modelling of the Oil Influence Upon the Working Cycle of Screw Compressors*, 1988, International Compressor Engineering Conference, Paper 645, http://docs.lib.purdue.edu/icec/645