MODELING AND SIMULATION OF THE CAR SUSPENSIONS WITH AMESIM

Alexandru Dobre, Nicolae Vasiliu, Anton Hadăr, Cristian Nicolae Andreescu

University Politehnica of Bucharest
E-mail: vasiliu@fluid-power.pub.ro

ABSTRACT: A few years ago the classical suspensions equipped the majority of vehicles. Today the use of active and adaptive suspensions begins to increase due to the better comfort and a better vehicle dynamics they are offering. The passive suspensions are now electronically controlled, thus becoming active suspensions for the most road vehicles in the luxury and the sport classes. A solution which can offer a compromise between price and comfort is the semi-active suspension. This new concept offers a comfort close to that of an active suspension with a much lower cost and reasonable fuel consumption. The general paper's objective consists in the development of different realistic mathematical models using AMESim simulation software, in order to simulate the dynamic behaviour of the road vehicles' suspensions for obtaining the best performance.

Keywords: modelling, simulation, vehicle, suspension, comfort.

MODELAREA ŞI SIMULAREA SUSPENSIILOR AUTOVEHICULELOR RUTIERE CU AMESIM – REZUMAT: Suspensiile clasice echipează încă majoritatea autovehiculelor produse în serie mare. Totuşi, suspensiile semi-active şi cele active sunt din ce în ce mai utilizate datorită confortului sporit pe care îl oferă şi unei mai bune dinamici a autovehiculului. În prezent, suspensiile pasive sunt controlate electronic, devenind astfel suspensii active ce echipează majoritatea autovehiculelor din clasa de lux şi pe cele din clasa sport. Suspensiile semi-active realizează un compromis între preţ şi performanţe, oferind un confort apropiat de cel al unei suspensii active cu un cost acceptabil şi un consum de combustibil rezonabil. Obiectivul general al lucrării îl constituie prezentarea unor modele matematice realiste construite în mediul AMESim pentru simularea comportamentului dinamic al suspensiilor autovehiculelor rutiere, în scopul optimizării performanţelor acestora.

Cuvinte cheie: modelare, simulare, autovehicul, suspensie, confort.

1. INTRODUCTION

The isolation of the car body from the forces transmitted by external stimuli is the fundamental task of any suspension. External energy required to generate the desired control forces of a smart suspension is an important issue which must be taken into account when designing the controller. Vehicle's speed on a certain road is first limited by the suspension's qualities and then by the engine's power.

As it is known from the linear systems theory with one degree of freedom, a spring-damper-mass system (modeled by a second order linear differential equation) having a good damping behaves well in the proximity of the resonance frequency and bad away from the resonance frequency, whereas a low damping system behaves in the opposite way (Guglielmino *et al.* 2008).

Vertical vibrations of the car body occur while the vehicle moves on a road with irregularities. This has a negative effect on passenger comfort and can even affect safety, because the tires could lose runway adherence (Johannes *et al*. 2010).

*1.1. **Modern suspensions for cars***

The classification of the modern suspensions can be carried out according to the energy consumption and the bandwidth of the actuator. Specifically, three characteristics can be observed: the control range, the control bandwidth and the power request. So, the modern suspensions (Savaresi *et al.*, 2010) are divided in:

- passive suspensions - they main feature is the impossibility of the external control of the suspension parameters;

- adaptive suspensions - the adaptive damper is characterized by a narrow bandwidth (1…5Hz); the control variable is the damping ratio, and the power request is low (10…20W);
- semi-active suspensions – the electronic damper is characterized by a relatively large bandwidth (usually, 30-40 Hz); the control variable is the damping ratio like in the adaptive suspensions; the power consumption is still low (10-20W);
- load-levelling suspensions – are the first types of active suspensions; the control acts on the parameters of the spring (usually, an air spring); the bandwidth is usually between 0.1…1.0Hz; the control variable is the static load; the power request is about 200W;
- slow-active suspensions – the control input is the suspension force delivered by an actuator which replaces the passive devices of the suspension; The bandwidth is usually between 1-5Hz and the power request is 1…5kW; the control variable is the force;
- fully-active suspensions – the difference between slow and fully-active suspensions consist in the bandwidth; this is usually between 20-30Hz and the power request is 5…10kW; the control variable is the force like in the slow-active suspensions case.

The semi-active suspension requires less space compared with the conventional one (Yaojung *et al*, 2010). The modelling and the control of the active suspension with a PISMC (Proportional Integral Sliding Mode Control) technique led to better performance compared with those obtained by SMC (Sliding Mode Conventional) technique (Suaib, 2008).

*1.2. **The AMESim language***

This section is dedicated to features and performances analysis of AMESim software (Advanced Modeling and Simulation Software), promoted by the LMS Corporation from Belgium and widely used by the reputed manufacturers of equipments and hydro pneumatic automated systems. Due to the complexity of the phenomena associated with liquids flow in domains specific to volumic hydraulic transmissions, the establishment of an optimal structural solution, corresponding to the given conditions, is done iteratively, synthetic steps alternating with the analysis ones. Rational synthesis requires deep knowledge of the construction and operation of volumic hydraulic transmissions elements. However, the main objective of synthesis - the satisfaction of certain imposed performances – can't be achieved with reasonable efforts without mathematical modeling and numerical simulation (Vasiliu *et al*., 2004).

Due to the direct connection with the analysis and synthesis tools of automated systems, the most widely used simulation program is SIMULINK, which was developed as an extension of MATLAB program. In recent decades (1986) a new language for modeling and numerical simulation called AMESim appeared. It has been successfully implemented in industry and academia, being developed by a group of university professors specialized in fluid control systems synthesis. This language allows assembling mathematical models of studied processes from models of technical components stored in libraries written in C programming language. Classical simulation languages are not able to communicate with other engineering languages. AMESim includes a complete interface for Matlab, significantly increasing the language analysis capacity (Vasiliu *et al.* 2004).

The symbols used by AMESim to represent elementary or complex components are based on standardized symbols used in engineering, like ISO symbols of hydro pneumatic components or block diagrams of automated systems; in the case where there aren't standard symbols for modeled components, the language uses icons which are easily recognizable by engineers. As a typical example, in figure 1 is shown an electrohydraulic servomechanism assembled from standardized components.

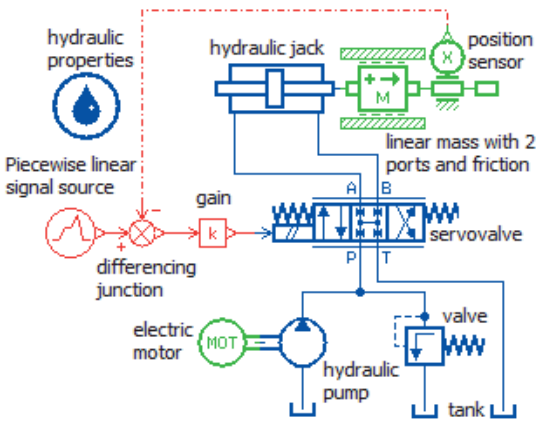

Fig.1. The electrohydraulic servomechanism modelled with standard components in AMESim

In AMESim, the schemes of the technical systems are built introducing in the active area of the screen symbols or pictograms taken from libraries. The simulation process, which follows after the elaboration of the scheme, contains the following steps: mathematical modelling of the pictograms associated components; defining the parameters of the components; the execution of the numerical integration; the interpretation of the results, which

describe the behaviour of the system, through adequate graphics.

2. MODELS OF SUSPENSIONS FOR CARS

2.1. The quarter vehicle model

This simplified model takes into account the mass of the vehicle and the wheels, the stiffness and damping of the suspension and of the tires. Figure 2 shows a classical series of vehicle quarter models: hydraulic, mechanical and pneumatic.

The mechanical model is a functional one, easy to use and suitable for analyse, compared to the two others (hydraulic and pneumatic), which are very well adapted for more expensive automotive and aerospace applications.

The main dynamic parameters of such a system are the following: m_s – sprung mass; m_u – unsprung mass; k_s - suspension stiffness; c_s - suspension damping, k_u - tire stiffness, c_u - tire damping.

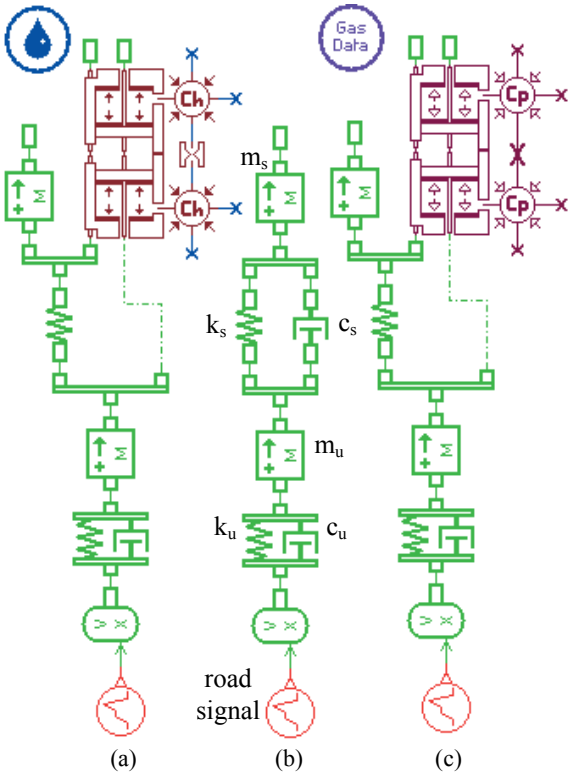

Fig.2. Models of suspensions for cars: a) hydraulic; b) mechanical; c) – pneumatic

A deep analysis of the suspension behaviour in the time or frequency domain needs to know in detail the excitation signal that can be induced by the road (due to the unevenness of the road) and the driver's manoeuvres (acceleration, braking etc.).

For improving the responses, a solution could be the increase of the damping, but this could lead to ineffective filtering for high frequencies, which would be unpleasant for passengers.

Some typical responses in displacement of these kind of suspensions for a small step input of 0.05m are shown in the figures 3…6. The compared simulation results of the behaviour of different types of suspensions for a vehicle quarter model are given in figures 4, 5 and 6.

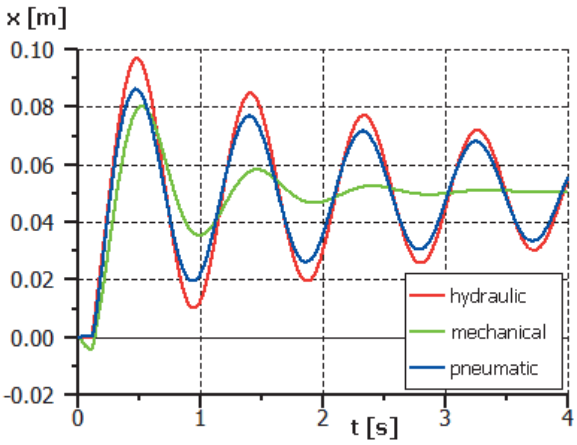

Fig.3. The displacement of the sprung mass in time

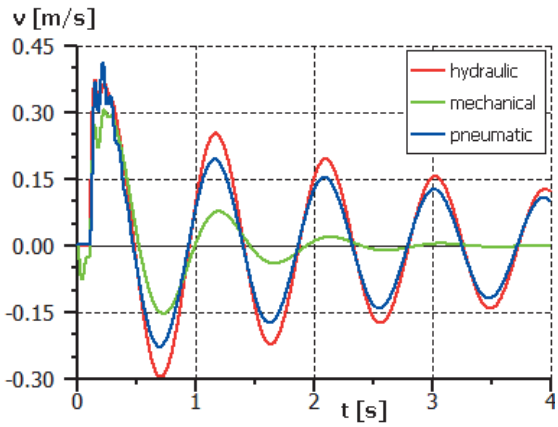

Fig.4. The velocity of the sprung mass in time

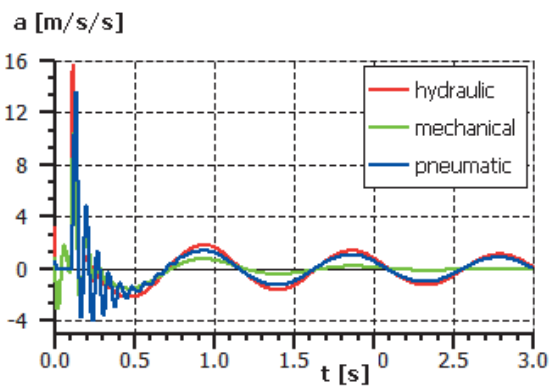

Fig.5. The acceleration of the sprung mass in time

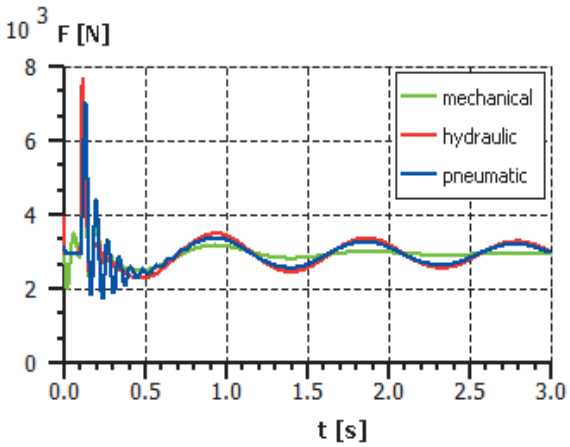

Fig.6. The force of the sprung mass in function of time

2.2. Active suspensions models

A basic model of an active suspension offers a static height correction (figure 7). It allows the car to keep the same piston's stroke whatever the payload is. This height correction is done using a three way hydraulic valve piloted by the displacement. This is a static correction only, which means that we lift the car and then it gets up. So, the valve has not a high dynamics. If the car has to keep a constant height during a sudden braking or a turn, the valve needs a better dynamic response (figure 8) and a different control alghoritm.

The simulations presented in the figures 9…12 allow a comparison between the two systems performances.

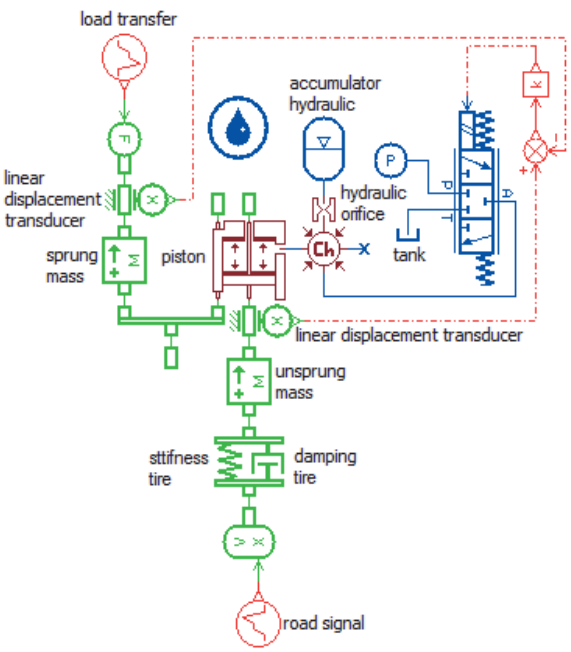

Fig.7. The active suspension model with damping orifice

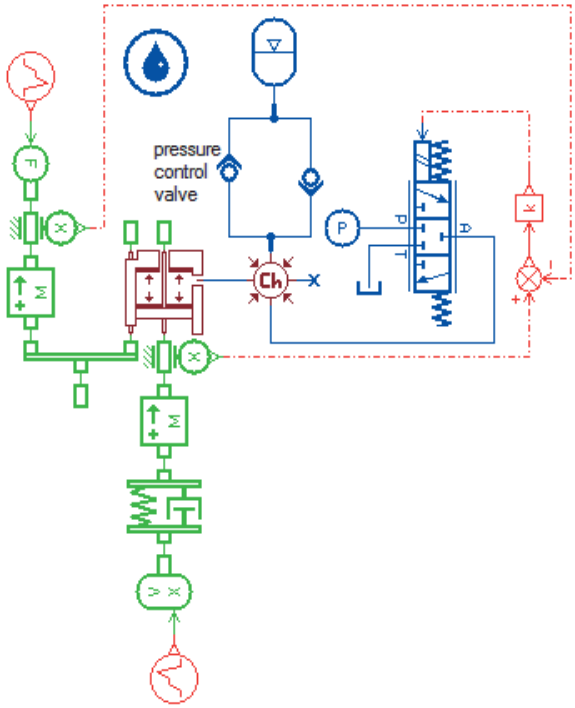

Fig.8. The active suspension model with high speed electrohydraulic servo valve

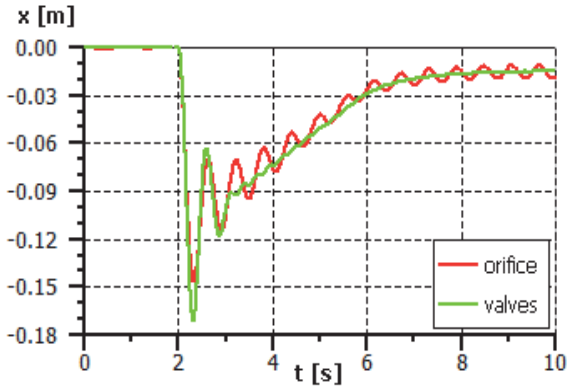

Fig.9. The displacement of the sprung mass in function of time for an active suspension for two cases

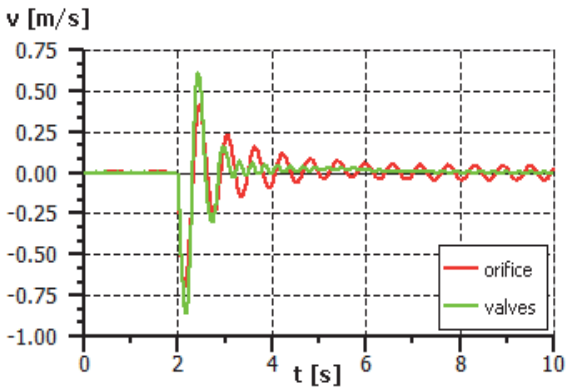

Fig.10. The velocity of the sprung mass in function of time for an active suspension for two cases

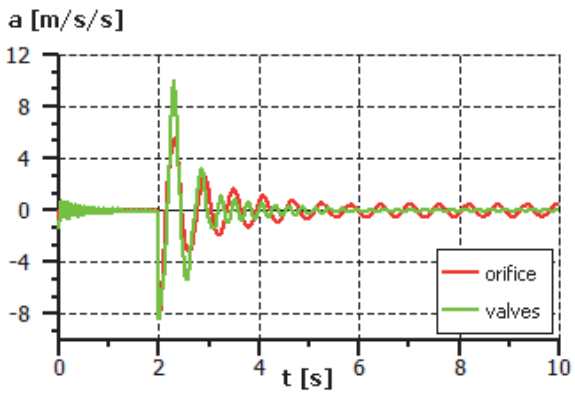

Fig.11. The acceleration of the sprung mass in function of time for an active suspension for two cases

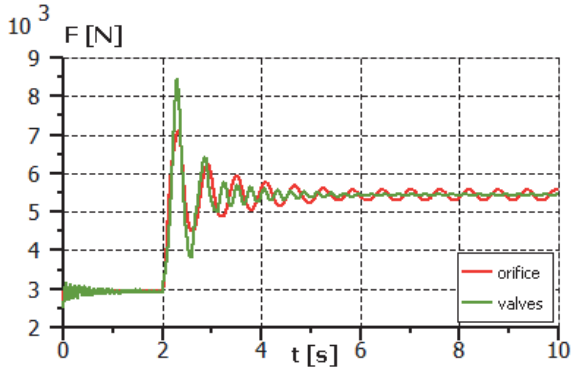

Fig.12. The force of the sprung mass in function of time for an active suspension for two cases

The viscosity of the fluid doesn't affect very much the behaviour of the damper controlled by a high speed servo valve, but the energy consumption is relative high for a common car. The behaviour of the damper equipped with an orifice depends on the oil viscosity, hence on the environmental temperature.

2.3. The full vehicle model

Vehicles are connected multi-body dynamic systems and hence, their vibrating model has multiple DOF system. The vibrating behaviour of multiple DOF systems is very much dependent to their natural frequencies and mode shapes (Andreescu, 2010). These characteristics can be determined by solving an eigenvalue and an eigenvector problem (Reza, 2008).

The 15 DOF chassis model is a multi-body system containing several pieces: car body, steering rack, spindle, wheel and all the mechanical joints between these elements. This are: car body - 6 DOF, steering rack body - 1 DOF, 4 spindle body – 4 x 1 DOF, 4 wheel body – 4 x 1 DOF. Figure 13 shows the vehicle full model created in AMESim program. A set of common inputs of the model is presented in figure 14. Velocity profile, steering wheel angle, and lateral wind velocity are included. Some simulation results are shown in figures 15 to 19. The model can take into account all the important inputs encountered in the car dynamics: rack displacement, engine torque, road adherence, braking torque, road profile etc.

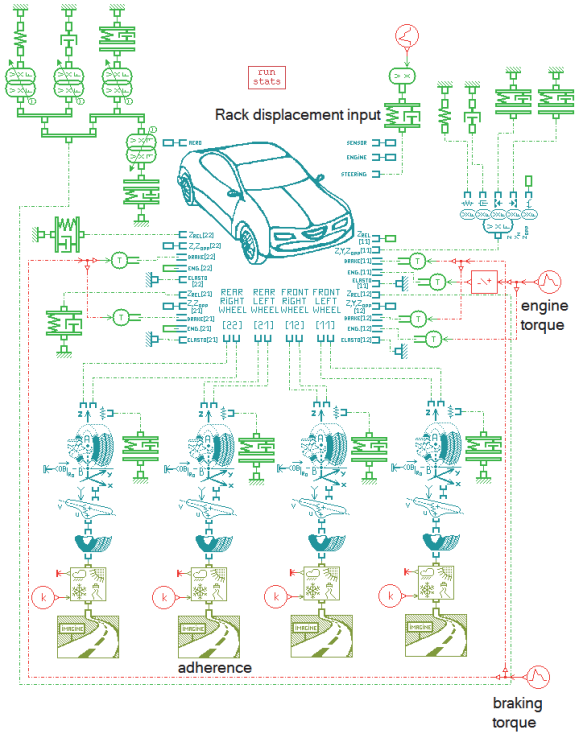

Fig.13. The full AMESim vehicle model

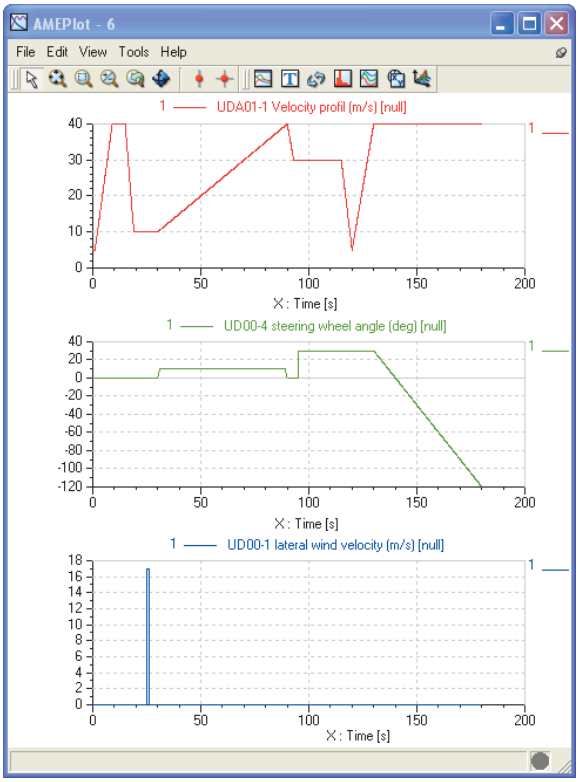

Fig.14. A set of common inputs of the model

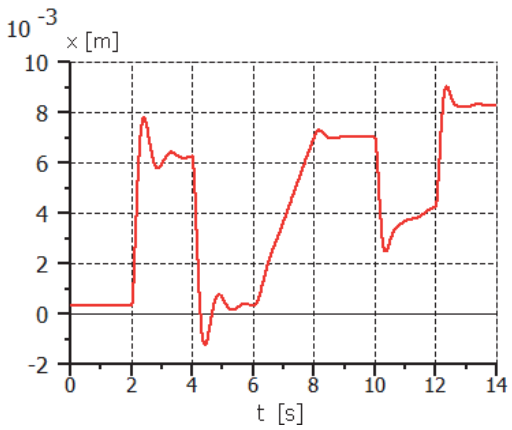

Fig.15. Vertical relative displacement of the front left suspension (spindle / car body)

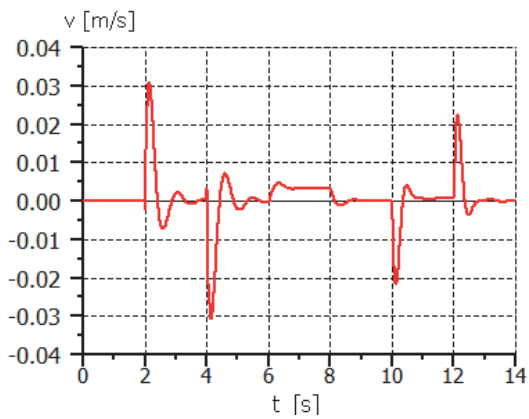

Fig.16. Vertical relative velocity of the front left suspension (spindle / car body)

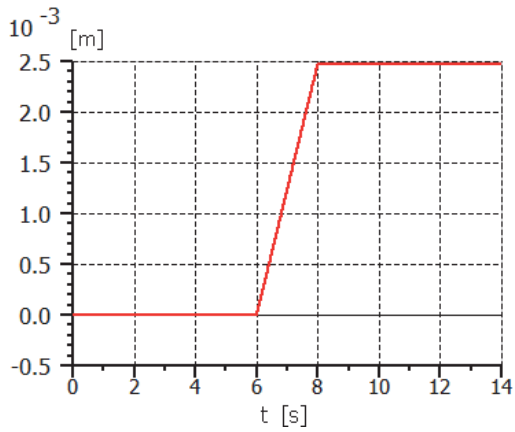

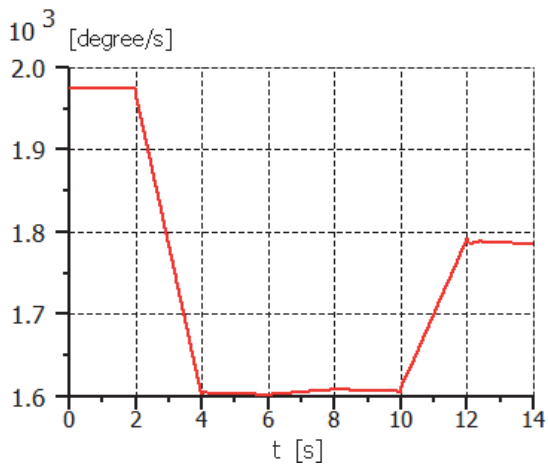

Fig.17. Relative rotary velocity (wheel /spindle) - front left spindle frame

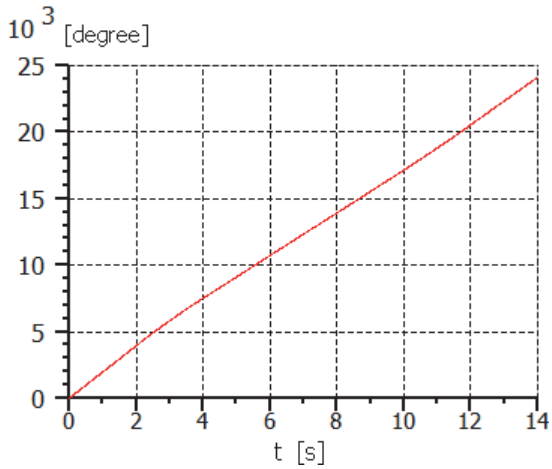

Fig.18. Relative angle (wheel / spindle) - expressed in front left spindle frame

Fig.19. Relative displacement steering rack / car body

3. CONCLUSIONS

Using the realistic mathematical models built with the AMESim program aid led to getting the best performance of the suspensions. The models in AMESim can be successfully used in applications from the automotive engineering, but in any other automotive domains (Irimia, 2014). Using the AMESim program for analyse the dynamic behaviour of the suspension, the working time can be reduced significantly. The numerical simulation with AMESim allows a rapid optimization of the constructive and functional parameters of the suspension. Because of the many possibilities offered by the program for development of the sub-models with the interdisciplinary libraries aid, the AMEsim begins to be adopted as a fundamental tool

design of most of reputed manufacturers for different applications (LMS Imagine.Lab, 2014).

ACKNOWLEDGEMENT

The work has been funded by the Sectoral Operational Programme Human Resources Development 2007-2013 of the Ministry of European Funds through the Financial Agreement POSDRU/159/1.5/S/134398.

REFERENCES

Savaresi S. M., Poussot-Vassal C. et al., (2010). *Suspension control design for vehicles*, Elsevier Ltd, ISBN: 978-0-08-096678-6.

Vasiliu N., Vasiliu Daniela. (2004). *Fluid Power Systems.* Technical Press House, Bucharest.

Andreescu, C.N. (2010). *Automotive Dynamics.* Politehnica Press, Bucharest (in Romanian).

Reza N. Jazar, (2008). *Vehicle Dynamics – Theory and Application*, Editura Springer e-ISBN: 978-0-387-74244-1.

Guglielmino Emanuele, Sireteanu T. et al., (2008). *Semi-active suspension control – Improved vehicle ride and road friendliness*, Springer, e-ISBN:978-1-84800-230-2.

Yaojung Shiao, Chun-Chi Lai and Quang-Anh Nguyen (2010). *The Analysis of a Semi-Active Suspension System*, Sice Annual Conference 2010, August 18-21, Taipei, Taiwan.

Johannes J. H. Paulides, Laurentiu Encica et al., (2006). *Design considerations for a semi-active electromagnetic suspension system*, IEEE Transactions on Magnetics, Vol. 42, NO. 10, 2006, DOI: 10.1109/TMAG. 2006.879963, Source: IEEE Xplore.

Suaib N.M., Sam Y.M. (2008). *Modeling and control of active suspension using PISMC and SMC*, Jurnal Mekanikal December 2008, No. 26, 119 – 128.

Irimia P.C. (2014). *Articulated Vehicles Electro Hydraulic Steering Dynamics*. PhD Thesis, University POLITEHNICA of Bucharest (in Romanian).

LMS Imagine.Lab - *Mechatronic simulation software for model - based systems engineering*, http://www.plm.automation.siemens.com/