Experimental research to develop a V2V image transmission system

Silviu IONIȚĂ [1]

Rezumat. *Capabilitatea autovehiculelor de a comunica între ele (V2V) precum şi cea de a comunica cu infrastructura rutieră constituie o cerinţă esenţială pentru implementarea sistemelor de transport inteligent. Problematica abordată se raportează la cele mai noi concepte privind mobilitatea în contextul dezvoltării durabile, având ca scop major creșterea siguranței în traficul rutier prin shimbul de informație în timp real. Problematica livrarii de conținut informațional video este relevantă pentru sistemele de informare la bord în care utilizatorii (vehicule) se conectează ad-hoc în proximitatea emițătorului fără utilizarea unor protocoale speciale care introduc întârzâieri și care să necesite comenzi/setări preliminare. Lucrarea prezintă experimentele preliminare derulate pentru validarea în laborator a unei tehnologii de transmitere a secvenţelor video în timp real, în sistem broadcasting cu acoperire locală limitată în proximitatea unui vehicul emiţător. Sistemul experimental constă dintr-un dispozitiv de filmare pe timp de zi și de noapte şi un transmiţător a informației video pe canal radio, în timp real, integrabil la bordul autovehiculelor. Cercetările experimentale au dovedit că sistemul este capabil şi capteze şi să emită stabil imagini din mediu și asigură accesul ad-hoc partajat la informația video a oricărui vehicul din proximitate, care are la bord un receptor compatibil și se află în zona de acoperire.*

Cuvinte cheie: *V2V Communication, video transmission, night vision, road traffic safety*

Abstract. *The capability of the vehicles to communicate each other (V2V) and, also to communicate with the road infrastructure (V2I) is an essential requirement for the implementation of intelligent transport systems. The issues addressed is related on the latest concepts on mobility in the context of sustainable development aimed at increasing safety in road traffic through real time information, as the main goal. The issue of video information content delivery is relevant to on board information systems where the users (i.e. vehicles) connect ad hoc on proximity transmitter without using of special protocols that usually introduce delays and require orders or preliminary settings. This paper presents preliminary experiments conducted in the laboratory to validate a technology for transmitting video sequences in real-time broadcasting system with limited local coverage close to a vehicle transmitter. The experimental arrangement consists of video capture devices in daylight and night and a transmitter on radio channel of video information in real-time, all these being embedded in vehicles. Experiments have shown that the system is able to capture and deliver stable images from environment and to provide the access to video information shared ad hoc with every vehicle in proximity that are carrying a compatible receiver and is in range.*

Keywords: *Comunicare V2V, transmisie video, vedere de noapte, siguranța traficului rutier.*

[1] Universitatea din Piteşti.

1. INTRODUCTION

V2V communication systems operate as, mobile data radio networks where channels are shared dynamically between two or more vehicles. The concept of V2V is the ad hoc exchange of information between vehicles in traffic, thus allowing the implementation of services for optimizing mobility such as: information board on road conditions (visibility, condition of the tread), traffic information (density, events, changes route), information in the context of the intentions of performing maneuvers in traffic, emergency, etc. It is expected that V2V and V2I communication systems will move from optional to the essential category in the near future, and services deployed on these will reach its peak in the era of generalized autonomous vehicular systems. Data sharing and exchanging between vehicles will have a high impact on safety improvement of the transport thanks to improving of awareness in traffic. Recent literature reports the current achievements in this field [1], [3], [4], [5]. Networks V2V/V2I may form temporarily and locally in a limited area where direct communication between entities is provided in the range of transponders, or may include large networks of telecommunications at global or regional level for certain types services (e.g. the emergency service e-call). Regarding uploading data communications V2V/V2I channels depend heavily on the type of service implemented. In general, the occasional or regular exchanges of information between vehicles do not involve large amounts of data, even in a "dialogue" longer between two or more entities in the system. In principle, the dialogue between vehicles involves the transmission of status parameters of vehicles, sending alerts and confirmations, information transmission via short messages, etc. Particularly, for applications requiring transmission to share multimedia content (especially video), the bandwidth use is higher and this may become critical to system operation. In such circumstances it may be considered allocating dedicated channels for continuous video transmission (streamming). The solution proposed in this paper is based precisely on the use of a mobile telecommunication television channel dedicated downlink from a base station (mobile) to more mobile users. The research starts from previous achievements reported in [2].

2. DESCRIPTION OF CONCEPT

The proposed solution addresses real time (streaming) V2V image transmision using dedicated radio channels in broadcasting regime. The system of image transmission between vehicles is structured in two parts: (1) the part for video capture and transmission, respectively (2) the part of reception and image display. The two parts are designed to be integrated onboard the vehicles as distinct modules or complementary with existing information systems . Basically, the image capture and transmission will equip large transport vehicles (trucks, buses, etc.) or vehicles acting as proves. The reception and onboard display can equip any motor vehicle which will receive indirect visual information from vehicles in the first category, in order to obtain a high lever of traffic awarness. The basic structure of the system is depicted in Fig.1.

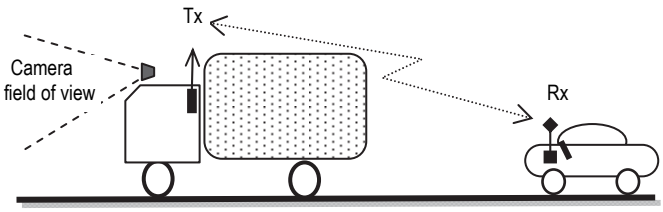

Fig.1. The basic structure of the system.

The system is designed to provide the following functions:

(a) Continuous video capture day or night and broadcasting digital radio channel covering in the area of the transmitter vehicle's proximity;

(b) Receiving video information and display it on board of the beneficiary vehicles that are within the coverage area.

The multiple access to television channel is supported by frequency division technique. Under this circumstance a number of subchannels are allocated in standard band. In addition, because of the downlink, the proposed system solves extensivelly the problem of multiple access by space division technique. Thus, exploiting the principle of near field communication (NFC) in combination with frequency division the diversity of system can be improved acceptable. By setting some rules for use of frequencies and using directional antennas can provide efficiency of the system exploatation.

3. WORKING PRINCIPLE

A working scenario for defining use cases related to image transmission system between vehicles is based on a very frequent roads traffic situation which is illustrated in Fig.2. An utility vehicle A is running on the lane followed by a vehicle B at a certain distance from the first. The vehicle A is equipped with the kit for video capture and image transmission. It curently captures the scene on its front. The vehicle B will receive within a useful range the image of the road scene in real time, which will give the driver or visual information which normally is not accessible to them. Thus, in particular situation, the presence in traffic of the vehicles named C and D will be known in due time by the driver of vehicle B. Information is beneficial for driver of B to adopt safe distance and the suitable relative speed to the vehicle in front (A). The information transmited by images is crucial especially for decision making to overcome safe. The benefit of the system becomes greater under conditions of night, by using thermal cameras.

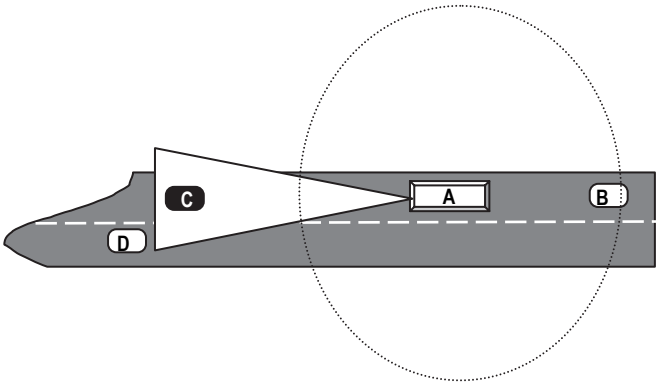

Fig. 2. Generic user scenario.

In the context of the generic scenario above discused solving some practical issues is required. The issues are followings:

- Allocation of frequency channels for vehicles transiting the same area;
- Sizing feature directivity broadcasting antennas.

First issue can be solved starting from the technical specifications of the radio transmission system. In certain case transmission system is operating in the 2.4 GHz IMS radio band. It allows sharing of 4 frequency channels from 2.468 GHz to 2.414 GHz as follows: CH1= 2,414GHz, CH2 = 2,432GHz, CH3 = 2,450GHz, and CH4 =2,468GHz. In addition to the frequency division the space division given by the transmission range that is maximum 100 meters in free space. Therefore, by dividing the communication channel both, in space and frequency, the access diversity can be high enough, so that the risk of interference is could be satisfactory diminished. A rough assessment shows that on each kilometer of a highway could work up to 10 transmitters. However, in heavy traffic, the transmissions coming from different vehicles cause interference in some parts of the road, in certain trafic scenario. Interference may be temporary, when two or more vehicles emitting are close enough each other under the range of separation in

space, for example: vehicles passing each other coming from opposite directions, overcoming vehicles or vechicles are in proximity coming on the intersecting roads. Under these circumstances, a management procedure for frequency channels using on roads and highways should be applied. In principle, such a system can manage the allocation of four frequency channels following the rules:

- Vehicles running on the same road, on different drive sense will share two different frequency channels;
- Vehicles runing on roads that intersect will share the other two frequency channels.

Changing the frequency channel manually by users can be done under the direction of the integrated traffic information.

Persistent interference can manifest in particular traffic scenario in which transmitter vehicles using yet same channel are running in the same drive sense closer each other than the range of space division. Such situations are possible in case of columns of vehicles, and the frequency conflict may be solved via intercommunication between drivers in order to adjust the relative distances between their vehicles or to change the channel.

In order to have as possible a reliable system in terms of immunity to interference, the second issue should be solved carefully. Thus, sizing the broadcasting antenna directivity is one of the key issue to improve system in terms of space division.

4. THE EXPERIMENTAL PLAN

Static tests performed in the laboratory validated the transmission of images in broadcasting regime, indoor in range up to 12 meters. Experimental chain is depicted in Fig.3. During the tests, a digital video recorder (DVR) was complementarly used in order to store the images received. The components of the system are described in Table 1.1.

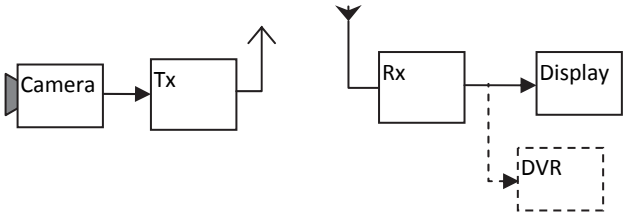

Fig. 3. The structure of the experimental.

Table1.1. **Modules and components**

Part name/Type	Role	Technical and operational features
Camera n/d	Thermal camera for night vision (Optionally: day light camera)	Thermal imaging performance of PathFindIR FLIR camera: - Spectral band 8 - 14 μ - Resolution 320 x 240 pixels - Field of view 36° h x 27° v - Optical automatic focusing: from 2.5m to infinit - detect a motor car at 800m
Radio transmitter Grandtec GWB 4000 - Tx	Together provides radio connection for image transmission between two vehicles in the ISM band.	- Resolution support up to 1280×1024 (PAL or NTSC) - Distance : Open area is 100 meters, indoor is 30 meters. (Actual range may vary depending on environment). Typical range of operation 125 - 150 feet (line of sight) - DC 6V power supply. Power Consumption at working status is 480mA, at standby status is 130mA.
Radio receiver Grandtec GWB 4000 - Rx		
On board display	Provides in-vehicle image	LCD, 7inch
Cables and conectors	Parties interconnect and power supply	Coax 50 Ohm cables for video and related BNC, Video RCA connectors/ addapters. Power supply for all parts is provided from DC 12V sources.

In order to test the solution under static conditions (in laboratory) and dynamic conditions (in vehicle) were prepared the functional assemblies shown in Fig. 4.

(a) Place emission: camera in connection with the radio transmitter.

(b) Remote: receiver and display board.

Fig. 4. System components for laboratory tests.

5. RESULTS AND DISCUSSION

First, a group of preliminary tests carried out using the system described above targeted indoor system functionality for video transmision with fixed positions of the elements. A particular test revealed functioning partially outdoor with transmitter located outside and the reception located inside a building. For instance, the image was broadcast from inner courtyard of laboratory at a distance of about 10 meters through a concrete wall and window double glazing. In Figure 5 are shown some images obtained in preliminary tests.

Fig. 5. Images transmitted during static tests.

Second, a group of tests was carried out on public roads with systems mounted on two cars that ran behind one another both daytime and night. Probe vehicle (A) equipped with the assembly camera connected to transmitter has provided the current traffic images to the vehicle beneficiary (B) equipped with a receiver connected to the display and to the auxiliary video recorder (DVR). In Figure 6 shows some image captures on DVR during the tests.

(a)Transmission daytime

(b) Transmission at night

Fig. 6. Images transmitted and stored during dynamic tests.

6. CONCLUSIONS

This paper present a proposed system for sharing video content between vehicles using the principle of broadcasting with freqvency and space division in 2.4 GHz ISM band. We mention that the equipment used, excepting FLIR PathFindIR thermal camera were not designed for automotive applications. The tests under dynamic conditions have highlighted some shortcomings of the laboratory model. So, often short interruptions were found temporary in image transmission (sometimes intermittent) especially during dynamic in traffic tests. They may have different causes such as loose connections to the experi-

mental assembly, the presence of electromagnetic disturbances, loss of radio link due to removal vehicles, etc.

Tests have revealed the possibility of using principle (proof of concept). The results obtained provide a basis for further preliminary tests with systems made of equipment dedicated to the automotive industry. Among the measures proposed to improve the performance of the system we note: the use of directive antennas for better division of space areas, increasing the number of frequency channels to ensure greater diversity. We mention that full perspective can be obtained after testing the system on more vehicles with different traffic scenarios.

Finally, we note that the solution using the ISM band on a small number of channels combined with space division access for communication between vehicles may advantageously complete spectrum use for V2V/V2I communications.

REFERENCES

[1] John Gapp, Bakhtiar Litkouhi, *"The Rise of the Crash-Proof Car"*, IEEE Spectrum, May 2014, pg.25-29.

[2] Silviu Ionita, Alin Mazare, Laurentiu Ionescu, Petre Anghelescu, *„Indoor Broadcasting System for Personalized TV Emissions Addressed to Teleassisted Persons"*, IFAC Proceedings Volumes, Volume 43, Issue 23, 2010, Pages 208-212, 2nd IFAC Symposium on Telematics Applications. (http://www.sciencedirect.com/science/article/pii/S1474667015343494)

[3] Philip E. Ross, *"Thus Spoke the Autobahn"*, IEEE Spectrum, Jan. 2015, pg.50-53.

[4] James Scoltock, *Safety: ADAS&Infotainment and connectivity*, in Automotive Engineer magazine, April 2016, pg.33-38. (www.ae-plus.com).

[5] James Scoltock, *"Safety first: The path to more advanced ADAS systems and autonomous vehicles"*, Report on Automotive World Conference 2016, Tokyo, in Automotive Engineer magazine, March 2016, pg.31-33. (www.ae-plus.com).