WATER AERATION USING FINE AIR BUBBLES GENERATORS

Beatrice TĂNASE, Rareş PĂUN, Nicolae BĂRAN, Giovani ROZA

Politehnica University of Bucharest, Faculty of Mechanical and Mechatronics Engineering, Bucharest, Romania

Abstract. For efficient water aeration, it is necessary to construct fine air bubble generators in which the main element is the plate with orifices for the introduction of air into the water. The research team constructed a fine bubble generator having 152 orifices with Ø 0.1 mm, which can be obtained by spark-erosion or micro-drilling. An experimental plant has been designed and built to see how the generator operates and the pressure loss that occurs when the air passes through it. The theoretical and experimental research on increasing the dissolved oxygen concentration in water led to satisfactory results.

Keywords: water aeration, fine air bubble generators.

1. INTRODUCTION

Bubble aeration devices can be classified into three major categories, as follows:

I. Fine bubble generators made of ceramic, plastic;

II. Fine bubble generators made of perforated elastic membranes;

III. Fine bubble generators with perforated plates made with coordinate micro drilling machines with Ø <0.5 mm drills.

Fine air bubbles are obtained by dispersing air in the water; consequently the water aeration equipment includes:

A) Compressors or blowers;

B) Air transport and distribution pipelines;

C) Measuring and control devices to ensure the proper functioning of the aeration system;

D) Air dispersing devices in water; these devices are porous media of various shapes: circular plates, rectangular plates, tubes, panels, domes or elastic membranes.

Oxygen transfer into wastewater is an important problem in sewage technology; the use of fine bubble aeration optimizes the amount of introduced air, resulting in significant energy savings. Fine air bubbles are obtained with the use of fine bubble generators (F.B.G.) made of ceramic materials; these types of generators are known in the literature [1] as porous ceramic diffusers.

The use of porous diffusers in ceramics has the following disadvantages:

- The emission of air bubbles takes place through air bubbles of unequal diameters;
- Air bubbles appear irregularly only on certain portions of the porous diffuser area;
- Porous diffusers exhibit high pressure losses.

In recent years, researches on water oxygenation has been geared toward obtaining fine bubble generators at which air to water inlets have a diameter of $d < 1$ mm. F.B.G. with the perforated plate made an unconventional process (spark-erosion) was constructed; this process ensures a uniform distribution of the orifices on the plate surface and an equal diameter of the orifices. The construction solutions of F.B.G. made by spark-erosion and their performances are presented in the papers [2] [3]. The orifice size is a critical parameter of the F.B.G. because it directly affects the air pressure inlet in the F.B.G.

The air pressure at the entrance to the fine bubble generator is a very important parameter in the selection, evaluation and monitoring of fine bubble generators, regardless of the shape or material from which it is built.

2. FINE BUBBLE GENERATORS MADE BY MICRO-DRILLING

In the laboratories of Politehnica University of Bucharest were designed and built fine bubble generators (F. B. G.) on which the orifices plate is made by spark-erosion (Ø <0.5 mm). In this case, the orifices are equal and evenly distributed in the *xOy* plane.

Two types of technologies can be distinguished for performing orifices in the microbubbles generator plate (M.B.G.):

I) Micro technologies machining that can create orifices of Ø> 1 μm;

II) Nanotechnologies machining producing orifices of Ø < 1 μm;

It is known from the literature [4][5] that with the reduction of the air bubble diameter, the oxygen transfer rate to the water is higher; the diameter of the air bubble is a function of the orifice diameter in the perforated plate of M.B.G.

The gas bubbles immersed in water come from the following sources:

• Atmospheric air (21% O_2 + 79% N_2);

• Atmospheric air + oxygen from the cylinder;

• Low nitrogen-containing air (oxygen concentrators).

These gas bubbles can be classified as follows (Fig. 1):

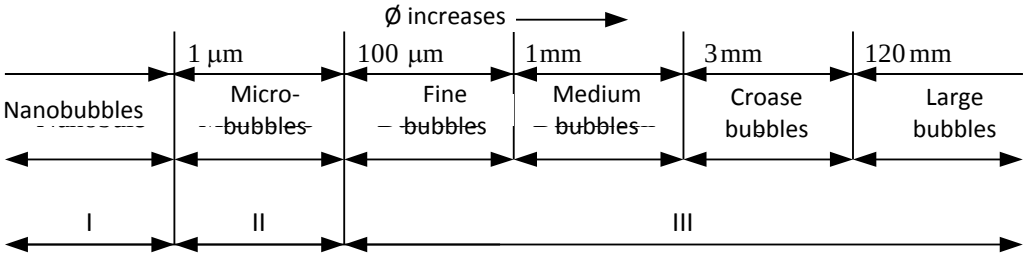

Fig. 3. Classification of gas bubbles according to their diameter (Ø)
I - the area where the gas bubbles can be observed under the microscope;
II - the area where gas bubbles can be observed with difficulty;
III - the area where gas bubbles can be observed with the naked eye.

The paper presents a microbubbles air generator, in which the plate has 152 orifices with d_0 = 100 μm. As a result of the research in the field of micro technologies, air bubbles can be called "micro bubbles".

3. CONSTRUCTION OF THE FINE BUBBLE GENERATOR

To obtain fine bubbles or microbubbles, the diameter of the orifices should be as small as possible (d_0 < 1 mm) and the distribution of the orifices in the plate should be uniform.

These two conditions can be achieved with the help of advanced technologies or modern micro-processing technologies [6] [7] [8]:

• Spark erosion processing;

• Electrochemical processing;

• Laser processing;

• Electron beam processing;

• Drills in coordinate, with Ø 0.5 mm drills.

The microbubbles generator has a dispersion element, a metal plate of rectangular shape, which is called M.B.G.

Figure 2 shows a plan view of M.B.G. of rectangular shape.

Figure 3 shows the constructive solution of the microbubbles generator (M.B.G.) to be used in experimental researches.

The orifices in the perforated plate were made by micro drilling machine KERN Micro.

This machine has an accuracy of ± 0.5 μm and can process parts with a height of 220 mm and a diameter of 350 mm.

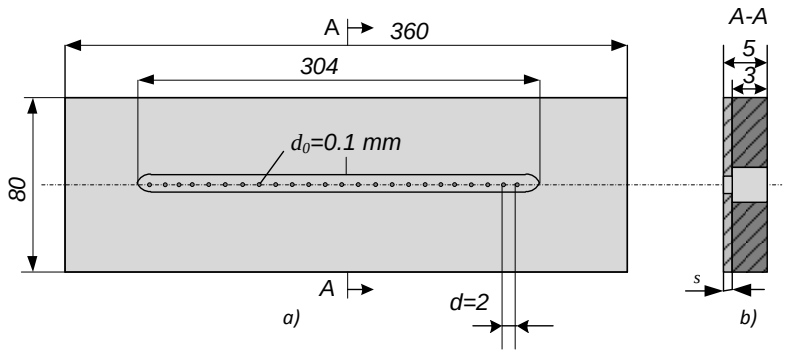

Fig. 4. M.B.G. perforated plate:
a) plan view; b) cross section.

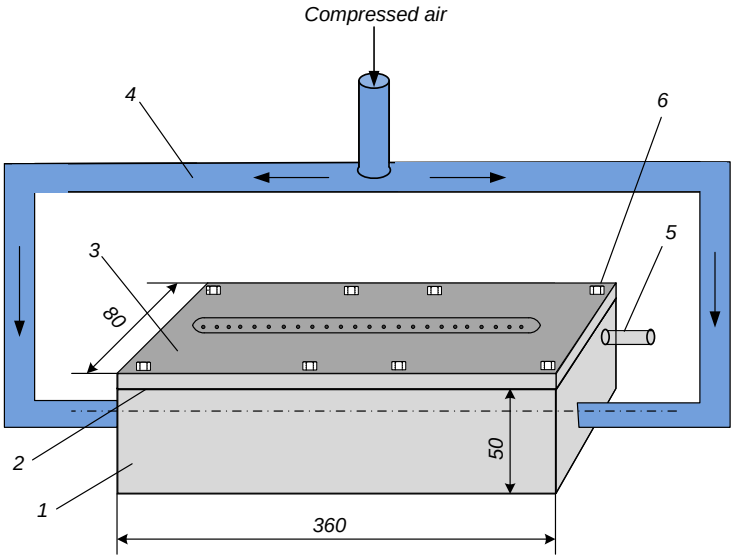

Fig. 5. Air microbubbles generator:
1 - compressed air tank; 2 - sealing gasket; 3 - the orifice plate;
4 - Ø 18 mm pipe with compressed air; 5 - connection for the measurement of the air pressure in the tank;
6 - perforated plate fastening screws.

In order to achieve this M.B.G., which is an original constructive solution, it took a theoretical and experimental work revealed by [9] [10].

In the case of the study, the air is continuously introduced into the tank for 120 ', so the regime is non-stationary, the dissolved oxygen concentration will increase in time.

In non-stationary regime, the measured amount will be the concentration of oxygen in water in time.

Measurements: water and air temperature, gas flow rate at the tank inlet and gas pressure in the M.B.G. body. The tank is shown in Figure 4.

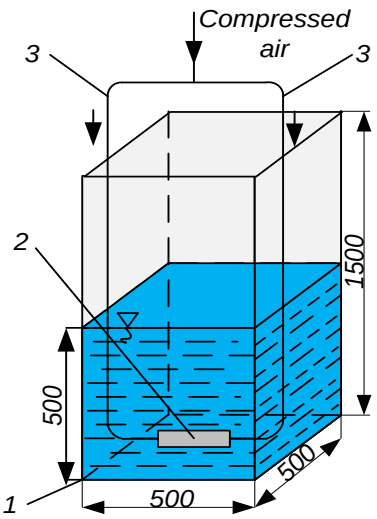

Fig. 6. Water tank into which the microbubbles generator is inserted; the generator is fixed:
V = 0.375 m^3; V_{H2O} = 0.125 m$_3$; *1* – transparent plexiglass tank; *2* – microbubbles generator (M.B.G.); *3* – air supply pipes.

4. THE DEVELOPMENT OF A PROGRAM FOR CALCULATING THE FUNCTION *C = f (τ)* FOR DIFFERENT COMPOSITIONS OF THE GAS INJECTED INTO THE WATER

The equation of the oxygen transfer rate in water is [1]:

$$C = C_s - \left(C_s - C_0\right) \cdot e^{-a \cdot k_L \cdot (\tau - \tau_0)} \qquad (1)$$

In this equation must be known:

C_0 – the initial concentration of dissolved O_2 in water;

C_s – dissolved O_2 saturation concentration in water for a given water temperature;

ak_L – the oxygen transfer volumetric coefficient [s^{-1}] or [min^{-1}] determined by one of the chemical, electrical methods.

The values of $C = f(\tau)$ is calculated on the basis of a calculation program described in Figure 5.

The operation of M.B.G. of rectangular shape with 152 orifices of Ø 0.1 mm is shown in Figure 6.

M.B.G. is provided with a perforated plate, with Ø 0.1 mm orifices performed by micro drilling.

5. COMPARISON OF THE THEORETICAL RESULTS WITH THE EXPERIMENTAL OBTAINED DATA

Following the computation program in Figure 5, a series of data resulted. Based on these data, the curve (1) of Figure 7 was plotted.

After the experimental research, the curve (*2*) of Figure 7 was plotted.

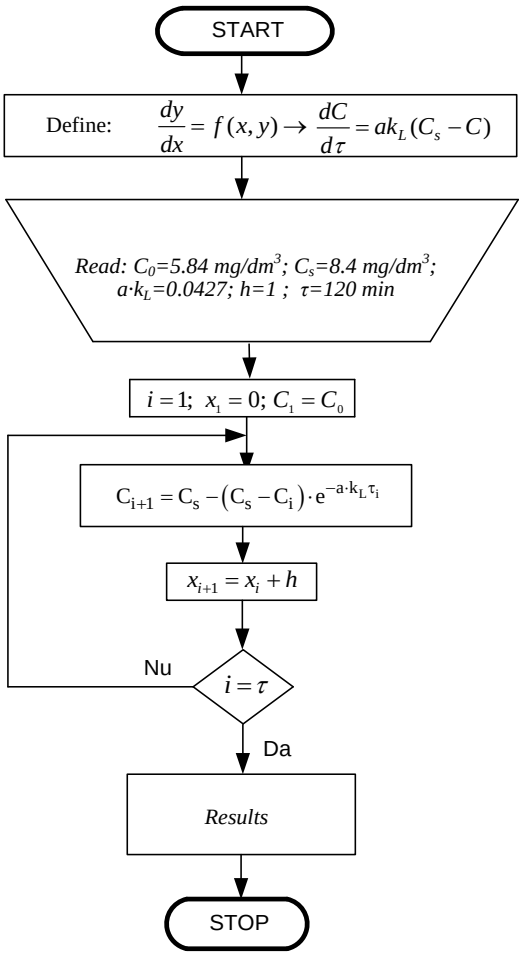

Fig. 7. Logical diagram for the function: $C = f(\tau)$.

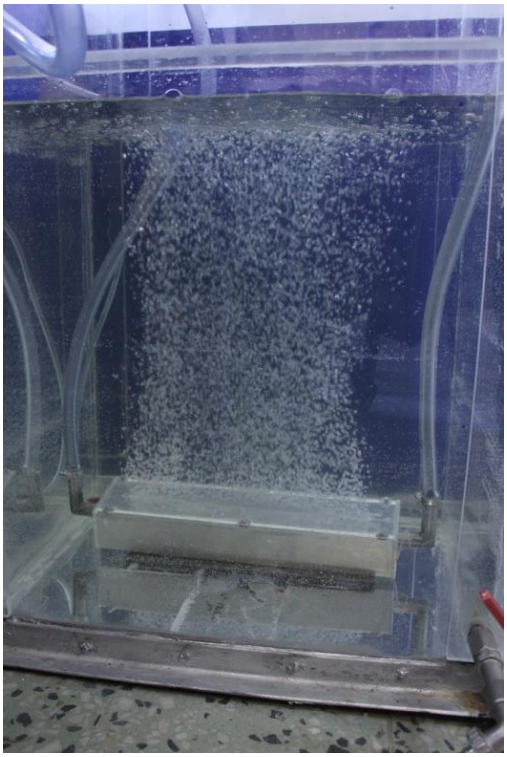

Fig. 8. M.B. G. with 152 orifices Ø 0.1 mm in operation.

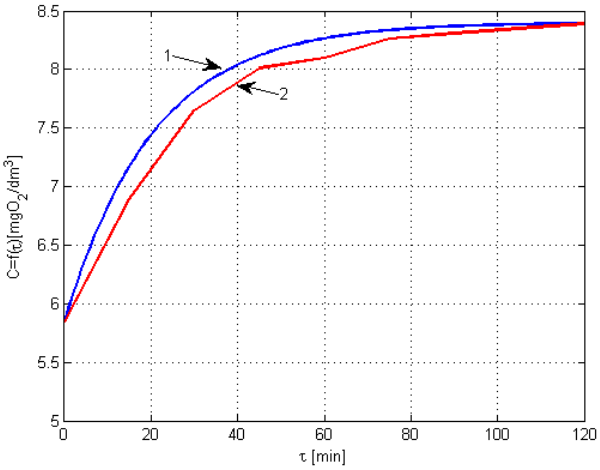

Fig. 9. Dissolved O_2 concentration for atmospheric air: *1* – curve *1* based on theoretical data; *2*- curve *2* based on experimental data.

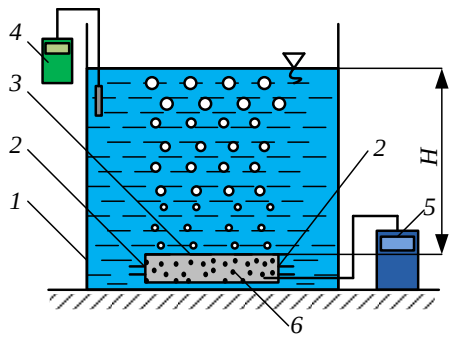

Fig. 8. Scheme for measurements:
1 – water tank; *2* – compressed air inlet connection;
3 – the plate orifice; *4* – digital thermometer;
5 - digital indication manometer; *6* - MBG body.

Between the curves *1* and *2* of Figure 7 a satisfactory concordance is observed.

6. PRESSURE LOSSES AT POROUS CERAMIC GENERATORS

The 152 orifices being distributed in parallel, the loss of pressure on each will be equal. Figure 8 shows a schematic diagram for determining pressure losses at the MBG [9].

The compressed air pressure in the tank (6) is p_1 and it must cover:

$$p_1 = p_H + \Delta p_{ts} + \Delta p_p \qquad (2)$$

p_H – hydrostatic load, H = 500 mm H_2O;

Δp_{ts} – loss of pressure to overcome superficial tension;

Δp_p – the pressure drop that occurs when the air passes through the orifice to the dry plate.

From experimental measurements resulted:

p_1 = 583 mmH_2O;

p_H = 500 mmH_2O.

Overpressure required for bubble formation [1][10]:

$$\Delta p_{ts} = \frac{2\sigma}{R_0} \quad (3)$$

σ – the surface tension of water / air at 20 ° C , the value of σ is: $\sigma = 73 \cdot 10^{-3}$ N / m.

R_0 – the radius of the bubble when it is detached from the orifice plate.

Note: $d_0 = 2 \cdot r_0$ and $D_0 = 2R_0$; $D_0 = 0.1 \cdot 10^{-3}$ m; $\rho_{H2O} = 10^3$ kg / m^3.

Air density is determined from the state equation [11]:

$$\rho = \frac{p}{RT} \ \text{kg/m}^3 \quad (4)$$

$$\rho = \frac{10325 + 583 \cdot 9.81}{287 \cdot (20 + 273.15)} = 1.26 \ \text{kg/m}^3$$

$$D_0 = \sqrt[3]{\frac{6\sigma d_0}{(\rho_{H_2O} - \rho_{aer})g}} = 0.00164 \ [\text{m}]$$

$$R_0 = \frac{D_0}{2} = \frac{0.00164}{2} = 0.82 \cdot 10^{-3} \text{m} \quad (5)$$

The relation (3) becomes:

$$\Delta p_{ts} = \frac{2\sigma}{R_0} = \frac{2 \cdot 73 \cdot 10^{-3}}{0.82 \cdot 10^{-3}} = \quad (6)$$

$$= 178.04 \ \text{N/m}^2$$

$$\Delta p_{ts} = \rho_{H_2O} \cdot g \cdot \Delta h_{ts} \ \text{N/m}^2$$

$$\Delta h_{ts} = \frac{p_{ts}}{\rho_{H_2O} \cdot g} = \frac{178.04}{10^3 \cdot 9.81} = 18.14 \cdot 10^{-3} \ \text{m}$$

$$\Delta h_{ts} \approx 18.14 \ \text{mmH}_2\text{O} \quad (7)$$

Equation (2) becomes:

$$583 = 500 + 18.14 + \Delta p_p \quad (8)$$

$$\Delta h_{ts} \approx 64.86 \ \text{mmH}_2\text{O} \quad (9)$$

The first term to the right of equation (8) is the overpressure required to overcome the hydrostatic load, the second to overcome the superficial tension and the third refers to the required pressure for an air bubble in the compressed air tank of MBG to passes through the plate into the water volume.

5. CONCLUSIONS

1. The paper presents a new type of microbubbles (MBG.) which has the following advantages compared to porous diffusers made of ceramic materials [9]:

✓ Provides a uniform distribution of air bubbles in the water body.

✓ All bubbles emitted by the microbubbles have the same diameter.

✓ The pressure loss of air passage through this type of MBG is lower than at porous diffusers.

2. The construction of a microbubbles generator, where the perforated plate has orifices with Ø100 μm, is a first in the field of water aeration.

3. With a smaller diameter of the air bubble in the water, ak_L will increase, so it will increase the oxygen transfer rate to the water;

4. The paper [3] compares the theoretical and experimental results for fine bubble generators, where the perforated plate has orifices Ø<0.5mm, it is shown that the most efficient generator is the one with the smallest orifice diameter.

5. The loss of pressure in a porous diffuser is 1.2 mH_2O [1], and at a MBG is 0.064 mH_2O; as a result, the energy consumed for compressed air is much lower in the case of MBG.

6. The theoretical and experimental research presented above leads to a very good concordance (Figure 7), which reveals the correctness of these researches.

REFERENCES

[1] G. Oprina, I. Pincovschi, Ghe. Băran, *„Hidro-Gazo-Dinamica Sistemelor de aerare echipate cu generatoare de bule”,* Ed. POLITEHNICA PRES, Bucureşti, 2009.

[2] G. Mateescu, *„Hidro-gazodinamica generatoarelor de bule fine”*, Teză de doctorat Facultatea de Inginerie Mecanică şi Mecatronică, Universitatea POLITEHNICA din Bucureşti, 2011.

[3] Al. S. Pătulea, *„Influenţa parametrilor funcţionali şi a arhitecturii generatoarelor de bule fine asupra eficienţei instalaţiilor de aerare”*, Teză de doctorat, Universitatea Politehnica din Bucureşti, 2012.

[4] G. Mateescu, A. Marinescu, N. Băran, *“A new Constructing Fine Bubles Generators”*, Bulletin Of The Transilvania University Of Braşov, vol.2, 2009, pp.359-367, Brasov.

[5] N. Băran, Gh. Băran, G. Mateescu, *“Research Regarding a New Type of Fine Bubble Generator”*, Revista de Chimie, vol.61, nr.2, 2010, pp.196-199.

[6] I. Gavrilaş, N. I.Marinescu, *„Prelucrări neconvenţionale în construcţia de maşini”*, Editura Tehnică, Bucureşti, 1991.

[7] A. Nanu, *„Tehnologia materialelor”,* Editura Didactica şi Pedagogică Bucureşti 1977.

[8] N. Ceaușescu, I. Popescu, *„Tehnologii neconvenționale”,* Editura Scrisul Românesc, Craiova, 1982.

[9] M. Constantin, N. Băran, R. Păun, G. Roza, *„Theoretical and Experimental Research about the Pressure Loss of a New Type of Fine Bubble Generator”*, International Journal of Emerging Research in Management & Technology, ISSN 2278-935, Volume 6, 2017, pp. 115- 120.

[10] Al. Pătulea, I. M. Căluşaru, N. Băran, *„Reasearches regarding the measurements of the dissolved concentration in water”*, Advanced Materials Research, Trans Tech Publications, Switzerland, vols. 550-553, 2012, pp. 3388-3394.

[11] Al. Dobrovicescu, N.Băran, şi col., Colecţia *„Bazele Termodinamicii tehnice”,* vol. I Elemente de termodinamică tehnică, Editura POLITEHNICA PRESS, Bucureşti, 2009.