TRANSCRITICAL CO_2 HEAT PUMP WITH EXPANDER-EJECTOR CYCLE AND INTERMEDIATE HEAT CARRIER CONTOUR

SIT MIHAIL, BERZAN VLADIMIR, SIT BORIS,
ANDRONATI NICOLAE, KIORSAK MIHAIL

Institute of Power Engineering of the Academy of Sciences of Moldova
Chisinau, Republic of Moldova,
e-mail: mihail_sheet@yahoo.com

Abstract. Heat pump with expander – ejector cycle, method of this cycle control of this cycle and the scheme of the heat pump with the second loop are presented in this paper.

Key words: heat pump, automatic control.

2000 Mathematics Subject Classification and/or 2008 PACS: 74A15, 80A20.

Application of heat pumps (HP) in the industry makes up a very small part from the total heat pumps amount [1]. Energy intensity decrease of the food industry production is now the purpose of innovative development in this area. So, for example, heat pumps using low grade heat from technological processes in winemaking practically are not applied, though examples of heating of a part of a factory premises from ground source heat pumps (USA). We had been offered earlier the scheme of HP use in winemaking [2] where HP is used simultaneously at cooling of fermenters and at the processing of wines by heat or at the sanitary processing, later the same heat pump is used in technological process of wine processing by a cold and simultaneously at hot water preparation (sanitary processing of the equipment, hot water for personnel needs). This heat pump is used at work of distiller after the end of the period of wine processing by cold, or in the absence of a distiller for the bleeding of heat from the boiler flue gases (serving for the preparation of steam and hot water for the technological process needs) with the purpose of fuel utilization factor increase of the boiler. Expander use is possible, in the last case, in a heat pump loop what raises its energy and economic efficiency. Heat pump station should be supplied with the replaceable gas coolers and evaporators, and also to have a second loop (intermediate heat carrier contour). It is discussed in this paper a cycle of the heat pump with the expander and ejector and HP work conditions at variable heat load assuming the use of linear control laws, and also an adjustable electric drive of the compressor. The use of ejectors for heat pumps on carbon dioxide is described in different works [3-6]. But common use of expander and ejector was not considered in heat pump till now.

2. **Heat pump scheme and its control**

It is shown at the Fig.1 heat pump with the expander – ejector scheme for a case of hot gases heat utilization. The scheme works as follows.

The subcritical CO_2 enters the compressor 1 in state point 1 (see Fig.2) after the internal heat exchanger 3, to which gas goes from the separator 8 at the state point 12. The compressed gas enters the gas cooler 2 at the state point 2. The supercritical CO_2 is then cooled in gas cooler to the state 3, passes the internal heat exchanger and leaves it in the state point 4.

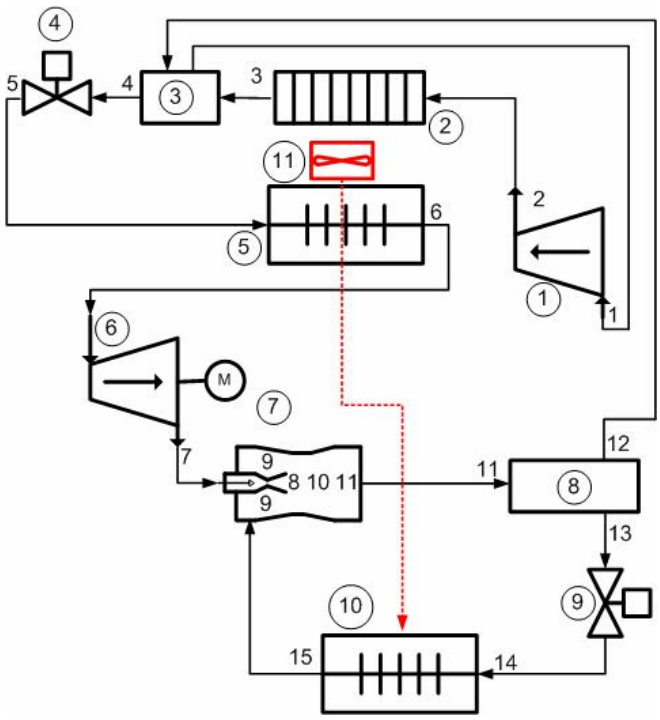

Fig. 1 – Schematic of expander–ejector heat pump cycle.

The supercritical CO_2 goes through control valve 4, to the additional heat exchanger 5, where the liquid is heated from the state point 5 to state point 6 by means of hot gas. It is shown by means of the dashed-line that the gas is moved through the heat exchanger 5 by the means of the fan 11. The hot gas goes after the heat exchanger 5 to the evaporator 10. Further the refrigerant from the heat exchanger 5 enters in the expander 6 where it extends up to a biphasic state point 7. This gas-liquid mixture enters on a working ejector input 7 where after an exit from a nozzle it comes to the state point 8 (Fig.2). Saturated vapor from the evaporator 10 in the state point 15 arrives on the second ejector input 7 in which case it extends to the biphasic state 9. Further in the ejector mixing chamber at constant pressure gas mixture occurs with the biphasic state in 8 and with a state point 9 up to a state point 10. Further refrigerant from the state point 10 isentropically passes in ejector's diffuser, to state point 11.

For the maintenance of a normal mode of expander work it is necessary to stabilize coordinate in point 6 of the thermodynamic cycle. The temperature in a state point 6 is stabilized by the automatic control system of the low grade heat carrier flow rate, and the pressure of the compressor is stabilized by the control valve 4 (see Fig. 1). Let's consider combined work of the valves in this system.

We will write down the equations establishing dependencies between pressures before and after the compressor and the flow rate through the control valves.

(1) $$dp_4^{'} + dp_9^{'} = p_4 - p_{14} - p_{5-13} = p_d$$

(2) $$G_1^{'} = C_{V1}^{'}\sqrt{dp_4^{'}}$$

(3) $$G_2^{'} = C_{V2}^{'}\sqrt{dp_9^{'}}$$

(4) $$G_2^{'} = U \cdot G_1^{'}$$

(5) $$p_{5-13}^{'} = p_5^{'} - p_{13}^{'}$$

It is accepted the following nomenclature: $dp_j^{'}$ –pressure drop across the control valve number j (Fig.1), $p_i^{'}$ – pressure in the i point of the loop, U – entrainment ratio of ejector and G_i – flow rates on the ejector

working input and on the ejector second suction input. $C_{V1}^{'}$, $C_{V2}^{'}$ – the flow coefficients, are dimensionless values that relate to a valves flow capacity. Superscripts correspond to the variant of compressor output setting.

It is necessary both gas cooler pressure stabilization in the system, and pressure stabilization on the exit of the evaporator. We will consider how the refrigerant flow rate through the evaporator and gas cooler will change at the refrigerant pressure disturbance in the heat pump loop.

From the equations (2 – 4) it is possible to obtain a rule for choice of the valves trims for given heat pump taking into account entrainment ratio of the ejector. As in the part of the expression (7) in brackets, obtained from expressions (1) and (6) is always more than one, it follows that it is always possible to choose such values $U, C_{V1}^{'}, C_{V2}^{'}$ which also satisfy to certain technical requirements to the ejector's entrainment ratio and control valves design.

(6) $$\Delta p_9^{'} = \frac{U^2 \left(C_{V1}^{'}\right)^2}{\left(C_{V2}^{'}\right)^2} \Delta p_4^{'}$$

(7) $$\Delta p_4^{'} \left(1 + \frac{U^2 \left(C_{V1}^{'}\right)^2}{\left(C_{V2}^{'}\right)^2} \right) = p_d$$

It is necessary for the equation 7 to have the solutions at certain entrainment ratio values, that expression in brackets of the equation 7 to be constant at the constant gas flow rate through the compressor or to vary to satisfy the expression 7 at change of the pressures in loop points, starting from state point 4 and finishing at state point 14. There is a considerable difference of pressures in the line after the control valve number 4 and the valve trim of this valve becomes essentially nonlinear irrespective of, whether the valve has the linear or equal percent trim rangeability. It is necessary to take this into account while designing the pressure control system of the compressor and of the evaporator.

Let's set the value of the mass flow rate $G_1^{''} < G_1^{'}$ at the constant value of p_d. In this case the system equations will be the following.

(8) $$G_1^{''} = C_{V1}^{''} \sqrt{dp_4^{''}}$$

(9) $$G_2^{''} = C_{V2}^{''} \sqrt{dp_9^{''}}$$

The solution of the system will be.

(10) $$dp_4^{''} = \frac{p_d}{1 + \frac{U^2 (C_{v1}^{''})^2}{(C_{v2}^{''})^2}}$$

It is necessary for the system to have the solution taking into account (8) and (9) that $C_{V1}^{'} \geq C_{V1}^{''}$, u $C_{V1}^{'} < C_{V2}^{''}$.

It is shown thus that the decision of the equations (8) and (9) always exists. For normal work of the valves control system it is necessary to provide a solving system (8) (9) at the current values of temperatures and pressures of the refrigerant in states points 4 …14 of the thermodynamic loop of heat pump system and demanded heat load.

Let's consider a thermodynamic cycle when there is no regenerative heat exchanger, and the gas superheat before of the compressor is ensured by the separate heat exchanger. In this case it is necessary to make separate exergetic analysis to choose, what is more effective from the point of view of energy expenditures: to have two resistances to refrigerant flow or one, having increased the resistance for a gas through the superheater before the compressor.

This stream enters the gas-liquid separator 8, where it is divided into saturated liquid and saturated vapor streams. The liquid stream enters at the state 13 into the control valve 9, which is connected with the evaporator 10.

The pressure-enthalpy diagram is built in accordance with [8, 9]. Here heat pump station heat efficiency factor will be: COP_{old} =8,68. If to assume that isentropic efficiency of the expander $\eta_d = 0,7$, and electric generator efficiency $\eta_e = 0,8$, than new heat pump system COP (COP_{new}) will be equal to:

$$COP_{new} = \frac{(h_2 - h_1)\cdot COP_{old}}{(h_2 - h_1 - (h_7 - h_6)\cdot \eta_e \eta_d)} =$$

$$= \frac{(63,12 - 33,57)\cdot 8,68}{(63,12 - 33,57 - (112,98 - 99,03)\cdot 0,8\cdot 0,7} = \frac{256,36}{21,74} \approx 11,8$$

So, COP growth will be 35,9 %. Overall consumption of energy by the installation will depend, considering the change of capacity of the ventilator for overcoming of aerodynamic resistance of the heat exchanger 5, on the compressor capacity and additional capacity of the ventilator. It is necessary to tend therefore in each specific case to choose the heat exchanger 5 with a minimal aerodynamic resistance, at the account of restrictions on its cost and dimensions.

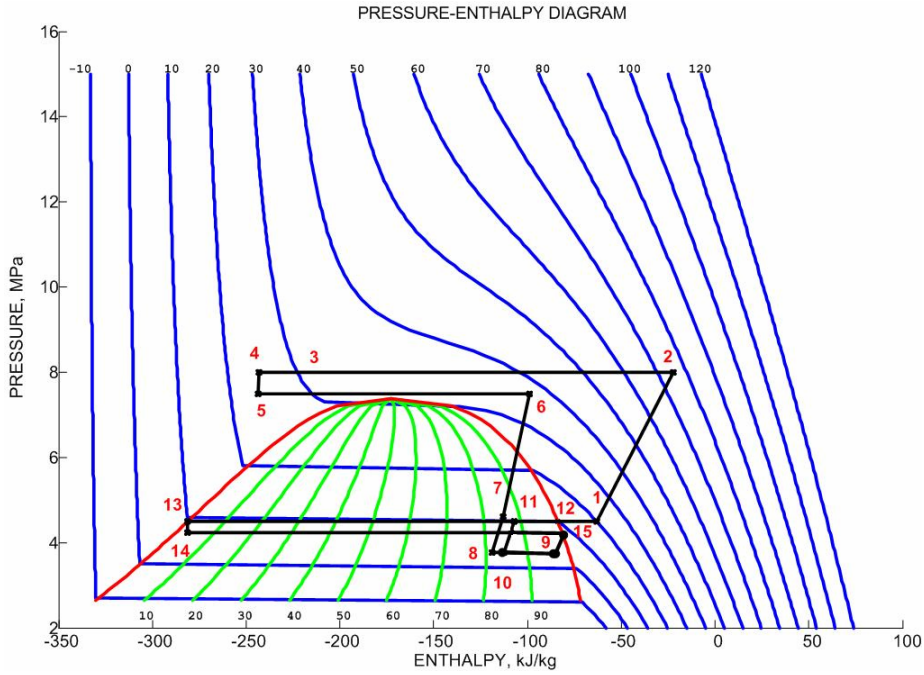

Fig. 2 – p-h diagram of expander–ejector heat pump cycle.

G – quality of vapor. Let's consider heat pump station scheme with an intermediate contour for an operating mode with installation for fermentation of wine and preparation of hot water for installation for wine heating (the hot water storage tank is not shown in figure below). The idea of work of an intermediate contour consists in control of the circulation rate of the intermediate heat carrier (it may be water with an addition of small quantity of polyethylene glycol) depending on capacity of a source of the heat produced at fermentation and control of the heat-transfer surface area in the heat exchanger 11 in the dependence of heat produced by the fermentation process as well.

The work of control system of this contour we describe on an example of the process of compensation of the disturbance in the form of heat pump heat demand growth.

As the increase of heat rating produced at fermentation can be sudden it leads to the increase of temperature of a fermenting liquid and fast increase of temperatures difference on heat pump evaporator which can lead to unstable work of the evaporator.

At the increase of the temperature of a fermenting liquid and increase of the heat capacity which is necessary to supply to the tank with this liquid, it is necessary: to increase the output of the compressor (at this the height of a column of a liquid in the evaporator will increase), to increase the intermediate's contour pump speed and to increase the heat-transfer surface area of the intermediate heat exchanger.

Table 1

Coordinates of the basic points (NN) of heat pump thermodynamic cycle with expander, ejector and intermediate heat exchanger.

NN	t, ˚C	p MPa	%G	h kJ/kg	s, kJ/kg	η	$\rho, kg/m^3$
1	20	4.50	100.00	-63.12	-0.882	0	116.96
2	75.32	8.00	100.00	-33.57	-0.832	0.95	166.12
3	30.00	8.00	100.00	-222.79	-1.467	0	702.06
4	25.16	8.00	100.00	-243.27	-1.535	0	775.27
5	24.42	7.50	100.00	-243.55	-1.534	0	770.28
6	37,00	7.50	100.00	-99.03	-1.060	0	252.55
7	11.00	4.61	85.50	-112.98	-1.060	0	243.30
8	3.00	3.77	81.40	-119.07	-1.060	0	256.53
11	10.00	4.50	87.1	-140.21	-1.142	0	331.16
12	10,0	4.50	100	-81.43	-0.938	0	124,37
13	10	4.50	0.00	-281.09	-1.651	0	861.10
14	7.50	4.23	3.00	-281.09	-1.650	0	854.50
15	10	4.50	100	-83.86	-0.954	0	135.16

The increase of the compressor output occurs with a very small inertia (inertia of the frequency converter constitutes tens milliseconds). The change of level of a liquid phase in the evaporator occurs in accordance with the first order differential equation [7]. The level of the intermediate heating carrier will change in the intermediate heat exchanger according to algorithm of an intermediate contour functioning.

The temperature on an exit of the intermediate heat exchanger will change according to the lag effect of this heat exchanger depending on change of the heating agent flow rate through the heat exchanger and the heat transfer surface area.

Let's consider the heat pump dynamics on the condition of set point change on produced heat capacity if fermentation process intensity changes. The control signal appears to increase the flow rate of heat pump refrigerant at the increase of the value of fermenting liquid temperature and of the speed of change of its temperature.

The level of two-phase mixture increases in the evaporator as well. The liquid temperature on an evaporator exit decreases because of heat-transfer surface area increase from the working heat pump agent to the evaporator second loop contour (contour of the intermediate heating agent). The level in the intermediate heat exchanger increases because of the increase of the set-point of its level controller simultaneously with level growth in the evaporator (as it is necessary to increase transferred heat capacity from heat pump through the evaporator in intermediate heat pump contour).

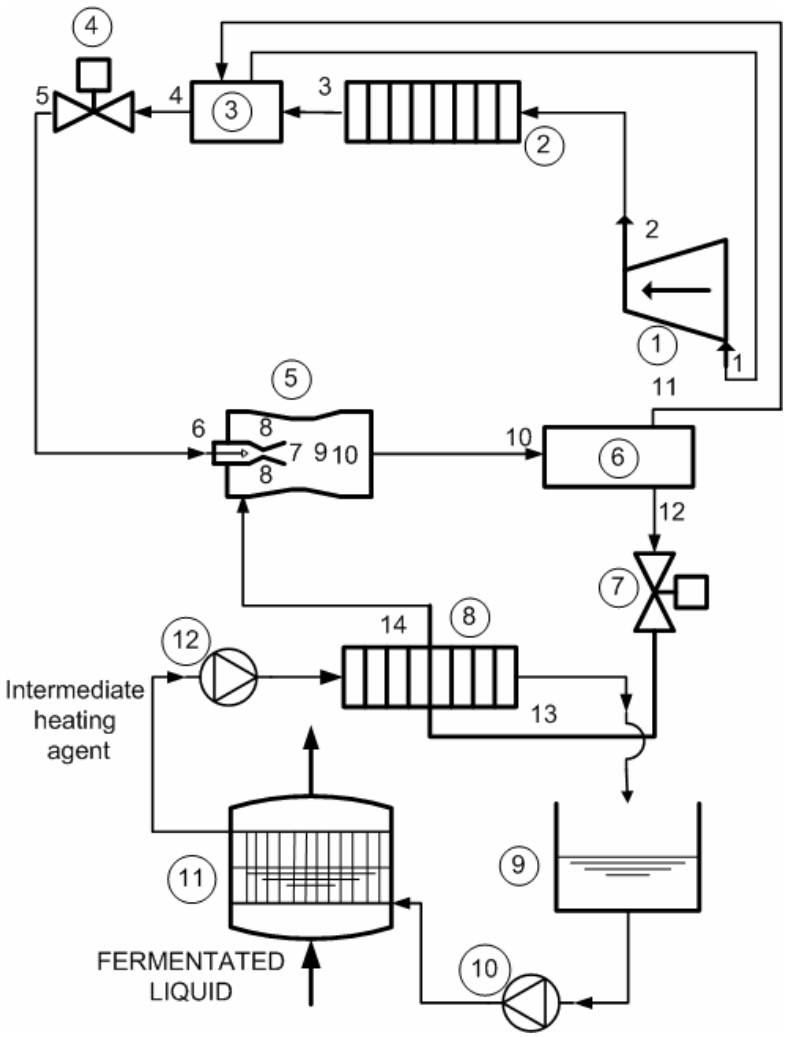

Fig. 3 – Heat pump scheme with the intermediate second loop

It begins after establishing of the new level value in an intermediate contour heat exchanger an increase of circulation speed in this contour until the prescribed temperature on an evaporator exit in an intermediate heat-carrier contour will be reached.

3. Conclusions

1. The use of the expander in a heat pump on carbon dioxide allows increasing its COP in case of the rational choice of a working point of the input of the refrigerant in expander. Thus should not decrease exergetic efficiency of heat pump station in whole.
2. The choice of flow coefficients of control valves in the heat pump should be defined from a condition of the maintenance of their common work.
3. The contour of the intermediate heating agent with variable parameters is an effective tool for transfer of changing heat capacity from the source of low grade heat through the heat pump to the consumer.
4. Proposed technical solutions can be applied in heat pumps for food industry and agriculture.

REFERENCES

1. Jovmir M. M., *Utilization of low source heat from combustion products of fuels by means of heat pumps*. Industrial Heat Engineering, (in Ukrainian) **30**, *2*, 90-97 (**2008**).
2. Balanuta A. V., and others *Energy efficiency decrease of wine production technological processes due to use of heat pumps and heat pipes.* Problems of the Regional Energetics, *3*, (**2009**), http://ieasm.webart.md/data/m71_2_122.doc

3. L i D., G r o l l A., *Transcritical CO2 refrigeration cycle with ejector-expansion device. International Journal of Refrigeration,* **28**, *5*, 766–773, **(2005)**.

4. Y a r i M., S i r o u s a z a r M., *Cycle improvements to ejector-expansion transcritical CO2 two-stage refrigeration cycle*. International Journal of Energy Research, **32**, *7*, 677–687 **(2008)**.

5.D e n g J-Q., J i a n g P-X., Lu T., L u W., *Particular characteristics of transcritical CO2 refrigeration cycle with an ejector*. Applied Thermal Engineering, **27**, *12*, 381–388 **(2007)**.

6. E l b e l S., H r n j a k P., *Experimental validation of a prototype ejector designed to reduce throttling losses encountered in transcritical R744 system operation*. International Journal of Refrigeration, **31**, *3*, 411-422 **(2008)**.

7. T a o C h e n g., X i a n g – D o n g H e., H a r r y A s a d a H., *Nonlinear Observer Design and Experimental Verification for Heat Exchangers during the Start-up Process.* Proceedings of the 2005 American Control Conference, June 8-10, Portland, OR, US, **2005**. pp. 4814-4819.

8. S p a n R., W a g n e r W., *A New Equation of State for Carbon Dioxide Covering the Fluid Region from the Triple-Point Temperature to 1100 K at Pressures up to 800 MPa*. Journal of Physical and Chemical Data, *6*, 1509-1596, **(1996)**.

9. S p a n R., W a g n e r W., *Equations of State for Technical Applications. III. Results for Polar Fluids.* International Journal of Thermophysics, **24**, *1*, 111-162, (**2003)**.